INSTALLATION DIRECTIONS

BEFORE APPLYING THIS DEVICE:

A. Check that handing of hardware corresponds to handing of door. **See Instruction sheet #41023 for changing the device handing, if necessary.**

1. PREPARE DOOR

A. Tape template No. 1 to inside face of lock stile. Be sure centerline of device on template is parallel to edge of door and backset is as shown in schedule. Be sure centerline of device is 39 - 13/16" to finished floor.

B. Prepare door as shown. See Fig. 1 for metal door application.

C. Prepare for top and bottom bolt guides. See Figs. 2 and 3.

2a. INSTALL ROD CONTROL ASSEMBLY (ALUM DOOR) (FIG. 4A) (See 2b for Hollow Metal Application

A. Check metal thickness of door, if 1/8 inch or less, place a washer under the sex bolt, see Fig. 4A. If metal thickness is greater than 1/8 inch, omit the washer.

B Remove burrs and insert sex bolt head into 7/32 dia. hole from interior of door thru rod control cutout. (Fig. 4A)

C. Thread sex bolt anchor on sex bolt head and tighten. (Fig. 4B)

D. Remove sex bolt anchor and install rod control assembly with spring toward bottom of door.

E. Replace sex bolt anchors. (Fig. 4C)

2b. INSTALL ROD CONTROL ASSEMBLY (REINFORCED HOLLOW METAL DOOR) (FIG. 4D)

A. Check for reinforcing; if not reinforced, follow procedure in 2a for alum doors. If reinforced, continue with steps B, C & D below.

B. TAP 1/4 - 28 thread for hex stud.

C. Install rod control assembly with spring toward bottom of door.

D. Install hex studs.

3. INSTALL TOP ROD AND BOLT GUIDE ASSEMBLIES (FIG. 2A)

NOTE: **ASSEMBLE ROD MEMBER ON TL DEVICES IF REQUIRED. SEE DIRECTIONS IN CONTROL BOX.**

A. All stock size devices are furnished with top rods as standard for 7'0" high doors.

B. Assemble top rod connector and rod connector pin. Rivet pin securely. NOTE: Select correct hole for desired rod length. (See Fig. 2D)

C. Install cylinder release bracket on **5547NL** device only. Note that handing stamped on bracket corresponds with handing of door. (See Fig. 2C) (Supplied with trim)

D. Cut top bolt guide as hand of door requires. See Fig. 2B

E. Slip top rod assembly thru opening in top of door.

F. Insert top rod connector into rod control assembly. Start socket retaining screw in rod control.

G. Install top bolt guide assembly.

4. INSTALL BOTTOM ROD AND BOLT GUIDE ASSEMBLIES (FIG. 3A)

A. Assemble bottom rod connector and rod connector pin. Rivet pin securely. NOTE: Select correct hole for desired rod length. (See Fig. 3C)

B. Slip bottom rod assembly through opening in bottom of door.

C. Insert rod connector into rod control assembly. Start socket retaining screw in rod control.

D. Install bottom bolt guide assembly. Cut per Fig. 3B.

E. Adjust bottom rod connector until bolt has 1/2" extension, tighten socket set screw.

5. APPLY OUTSIDE TRIM (IF REQUIRED)

A. See directions in trim carton, if required. Line "X-X" is centerline of trim and is parallel to edge of door and centerline device. Locate line "X-X" on outside face of door.

B. Prepare outside face of lock stile.

C. Apply trim.

6. ADJUST TOP ROD (FIG. 6)

A. Adjust top rod length so plunger engages when top bolt is depressed.

B. Adjust cylinder release bracket to contact trim cylinder cam, if required. Secure with top socket retaining screw.

C. Test top and bottom bolt extension and retraction by lifting rod control with screwdriver or equivalent tool. Full latch bolt extension is 1/2 inch.

7. APPLY LOCK STILE CASE (FIG. 7)

A. Attach lock stile to door. See Fig. 1

8. HANG DOOR AND INSTALL SILL STRIKE OR THRESHOLD

9. INSTALL SOFFIT STRIKE

NOTE:

A. **FOR WOOD FRAME, LOCATE SOFFIT STRIKE POSITION AND MORTISE FRAME FOR STRIKE.**
472-U STRIKE FOR 1-3/4" THICK DOOR
473-U STRIKE FOR 2-1/4" THICK DOOR
SEE FIG. 9A.

B. **FOR SINGLE OR DOUBLE DOOR INSTALLATIONS WITH NON-REINFORCED METAL FRAME, LOCATE SOFFIT STRIKE POSITION AND PREPARE FOR 471-U STRIKE. DOUBLE DOOR APPLICATION SHOWN FOR SINGLE DOOR APPLICATION USE APPROPRIATE HANDING AS SHOWN. SEE FIG. 9B.**

C. **FOR ALUMINUM AND REINFORCED HOLLOW METAL FRAME PREPARATION, SEE FIG. 9C.**

10. APPLY HINGE STILE CASE AND CROSSBAR TUBE (FIG. 5)

A. Dog lever arms in depressed position.

B. Slip crossbar tube on lock and hinge stile lever arm. **(See Direction No. 941009 for these instructions.)**

C. Be sure crossbar tube is level and hinge stile case is parallel to edge of door and approximately on centerline of exposed stile.

D. Using holes in hinge stile case, mark location and prepare door for sex bolts. Drill 13/32 dia. outside and 3/8 dia. inside.

E. Seat sex bolts in hinge stile of door with a soft hammer to prevent marking of door and screws.

F. Apply hinge case with crossbar in place.

G. Tighten wedge-tite set screws securely with dog key and screw-driver or equivalent for leverage, and test crossbar for free action. **(See Direction No. 941009 for these instructions.)**

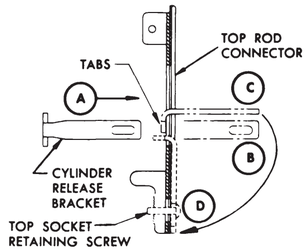

FIG. 2C

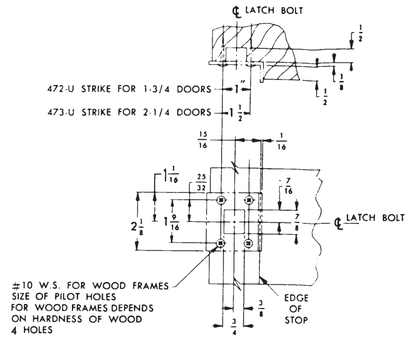

WOOD FRAME PREPARATION
FIG. 9A

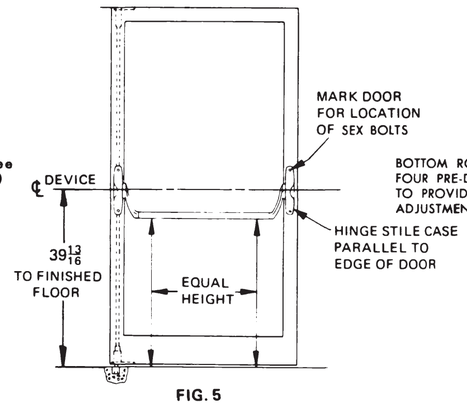

FIG. 5

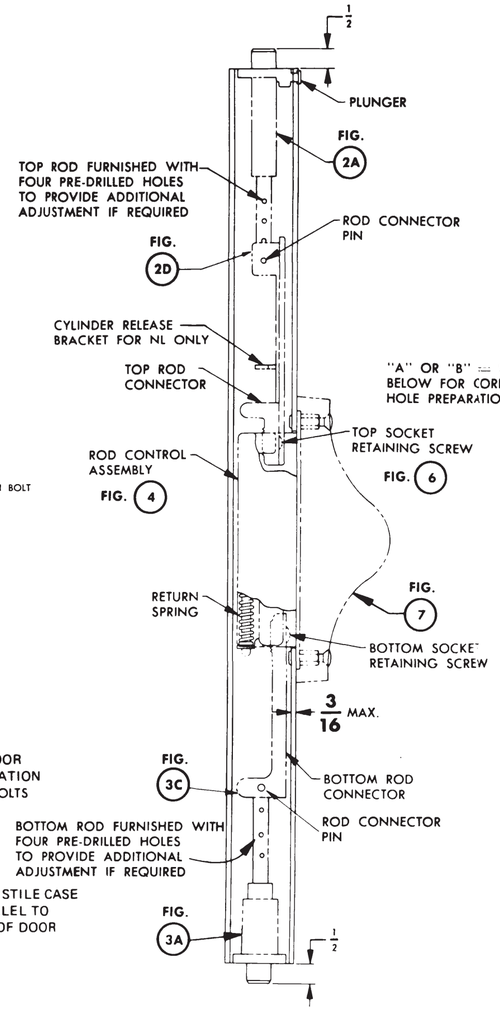

FOR TRIM APPLICATION SEE DIRECTIONS IN TRIM CARTON IF REQUIRED

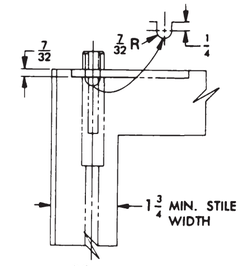

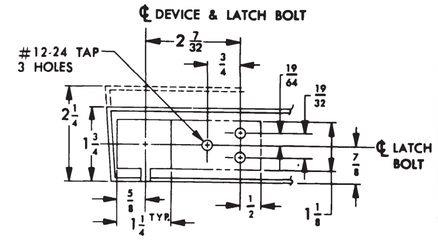

FIG. 2

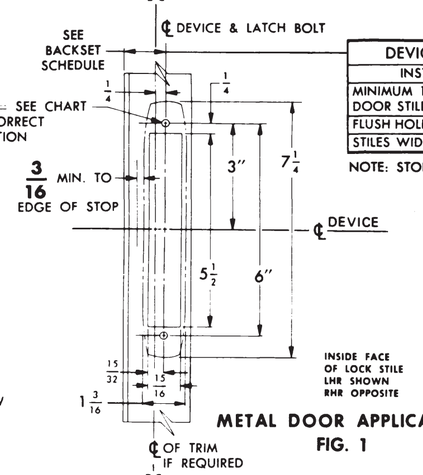

DEVICE BACKSET SCHEDULE	
INSTALLATION	BACKSET
MINIMUM 1-3/4 TO 2-5/16 DOOR STILE	1-5/32
FLUSH HOLLOW METAL DOOR	2-1/2
STILES WIDER THAN 2-5/16	1/2 OF STILE

NOTE: STOP THICKNESS OF 1/2 MAX. REQ'D.

METAL DOOR APPLICATION
FIG. 1

911066-00

Customer Service
1-877-671-7011 www.allegion.com/us

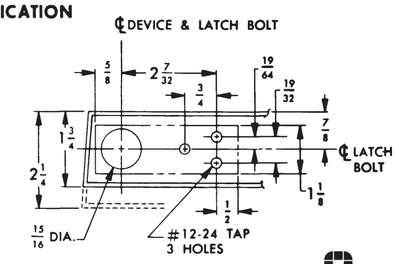

FIG. 3

ALLEGION

DESCRIPTION	5547EO, 5547DT, 5547NL & 5547TL SERIES VERTICAL ROD DEVICES	VON DUPRIN	
DIRECTION NUMBER	911066-00 (b)	DATE	06/14

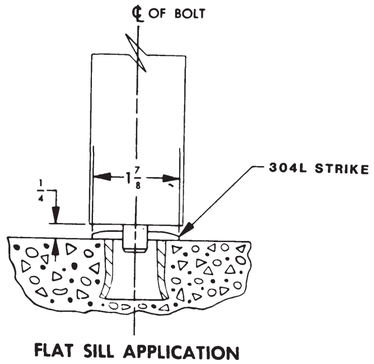

FLAT SILL APPLICATION

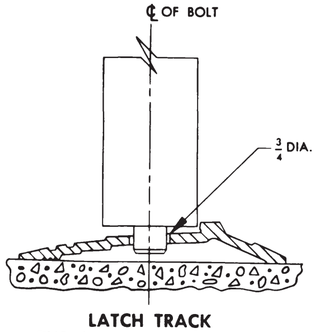

LATCH TRACK THRESHOLD APPLICATION

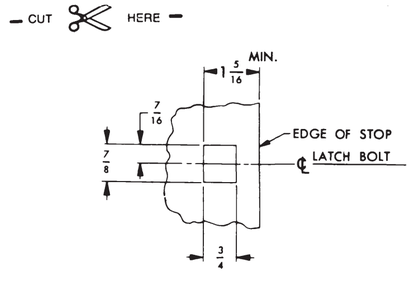

REINFORCED HOLLOW METAL AND ALUMINUM FRAME PREPARATION
FIG. 9C

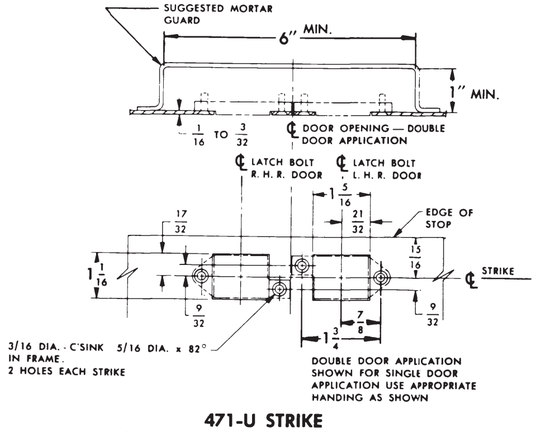

471-U STRIKE
HOLLOW METAL FRAME PREPARATION
FIG. 9B

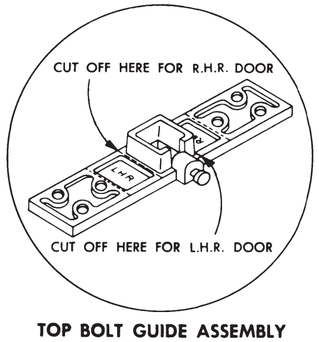

TOP BOLT GUIDE ASSEMBLY
FIG. 2B

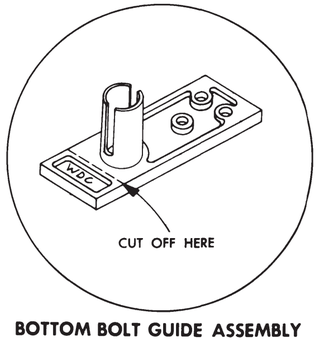

BOTTOM BOLT GUIDE ASSEMBLY
FIG. 3B

IMPORTANT

CHECK DOOR MATERIAL AND METAL THICKNESS FOR CORRECT DEVICE MOUNTING	
"A" — ALUM DOORS	"B" — REINFORCED HOLLOW METAL DOORS
7/32 Dia. — 2 Holes for sex bolt head. (See Fig. 4A and Direction Note 2a.)	1/4 - 28 TAP — 2 Holes for hex stud. (See Fig. 4D and Direction Note 2b.)

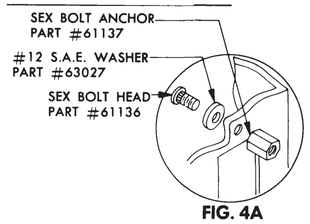

FIG. 4A

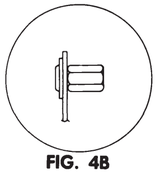

FIG. 4B

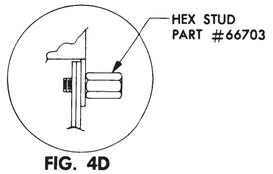

FIG. 4D

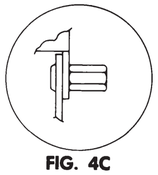

FIG. 4C

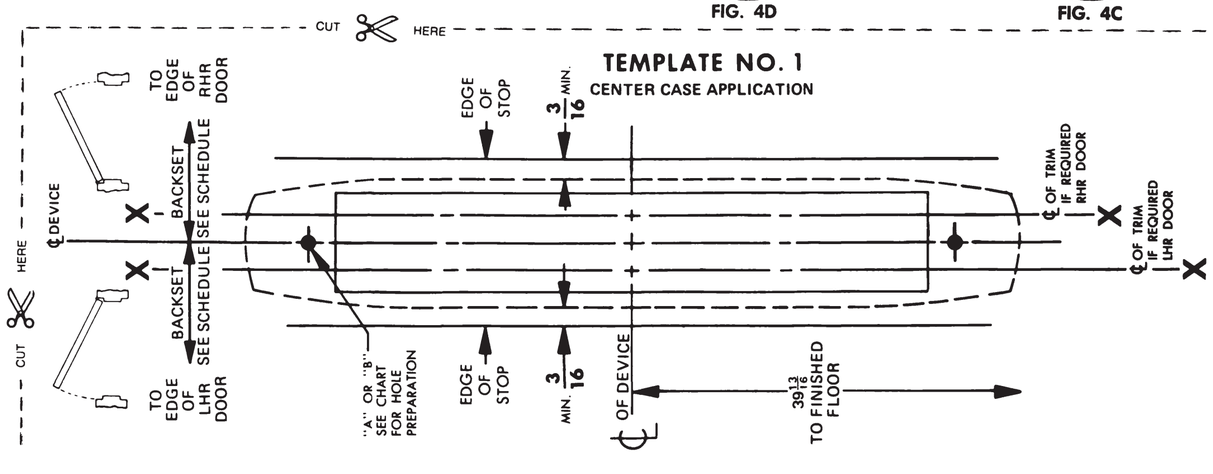

TEMPLATE NO. 1
CENTER CASE APPLICATION