740132

# Senior Swing

LCN®

2800 Overhead Concealed Series
9500 Surface Applied Series

Installation Instructions

**⚠ CAUTION ⚠**

**LCN Senior Swing**

**The Senior Swing Power Operator System is a low energy product and must conform to the latest version of ANSI/BHMAA156.19 (American National Standard for Power Assist and Low Energy Power Operated Doors).**

**Installation Instructions**

**All installation instructions are valuable references and should not be discarded. They should be given to the building owner or maintenance supervisor after installation is complete.**

**⚠ CAUTION ⚠**

**Improper installation or set up may result in personal injury or property damage. Follow all instructions carefully. For answers to questions, call:**

**Technical Support**

**1-877-671-7011**

**⚠ IMPORTANT ⚠**

**These instructions are presented in step-by-step sequence. It is very important that installation begins with "1. Pre-Installation Site and Product Check" (page 4) and continues as directed after each section.**

**⚠ WARNING ⚠**

**Always disconnect main power to the operator prior to replacing.**

## Table of Contents


General ..... 2
1 Pre-Installation Site and Product Check (Surface and Concealed) ..... 3
2 Header Installation (Concealed) ..... 4
3 Header Installation (Surface) ..... 5
4 AC Power and Ground Wiring (Surface and Concealed) ..... 7
5 Operator Installation (Surface and Concealed) ..... 8
6 Pivot Block Installation (Concealed, Center Pivoted) ..... 9
7 Breakaway or Fixed Stop Installation (Concealed, Center Pivoted) ..... 10
8 Control Box Installation (Surface and Concealed) ..... 11
9 Control Box Wiring (Surface and Concealed) ..... 12
10 Finger Guard Installation (Concealed, Center Pivoted) ..... 13
11 Door and Arm Installation (Concealed, Center Pivoted) ..... 14
12 Arm Installation (Surface and Concealed) ..... 16
13 Glazing (Surface and Concealed) ..... 16
14 Control Box Functions (Surface and Concealed) ..... 16
15 Plate Installation (Surface and Concealed) ..... 17
16 Release for Service (Surface and Concealed) ..... 17


## General

The Senior Swing is an automatic electromechanical swinging door operator for a single door, simultaneously operated, or independently operated pair of doors. The concealed application operates center pivoted, offset pivoted, or butt hung/hinged doors. The surface application operates balanced (push side only), center pivoted, offset pivoted, or butt hung/hinged doors in either push or pull mode.

When activated, the Senior Swing drives the door to the full open position, then electrical power is turned off and the door is closed by spring force. The activating circuit opens the door from any position in the closing swing. During a power failure, the Senior Swing acts as a manual door closer (size 3). Door opening and closing cycles, including opening speed, back check speed, hold open time delay, closing speed, and latch position, are adjustable.

## 1 Pre-Installation Site and Product Check (Surface and Concealed)

**⚠ IMPORTANT ⚠**

**Do not install the Senior Swing unless all of the following conditions are correct.**

1a Check that the product model is correct for the required application.

1b Check that all parts listed on the bill of material are in the shipping container.

1c Check architectural and final approved shop drawings for position of frame and openings.

1d For concealed applications, check that the opening allows 1/4” at each side and at the top so that the frame and the header can be plumbed square and caulked.

1e For surface mount applications onto 2” frames, consult factory to determine if mounting plate is required.

1f Special tool may be required for installation of rivet nuts.

1g Check for sufficient header clearances:

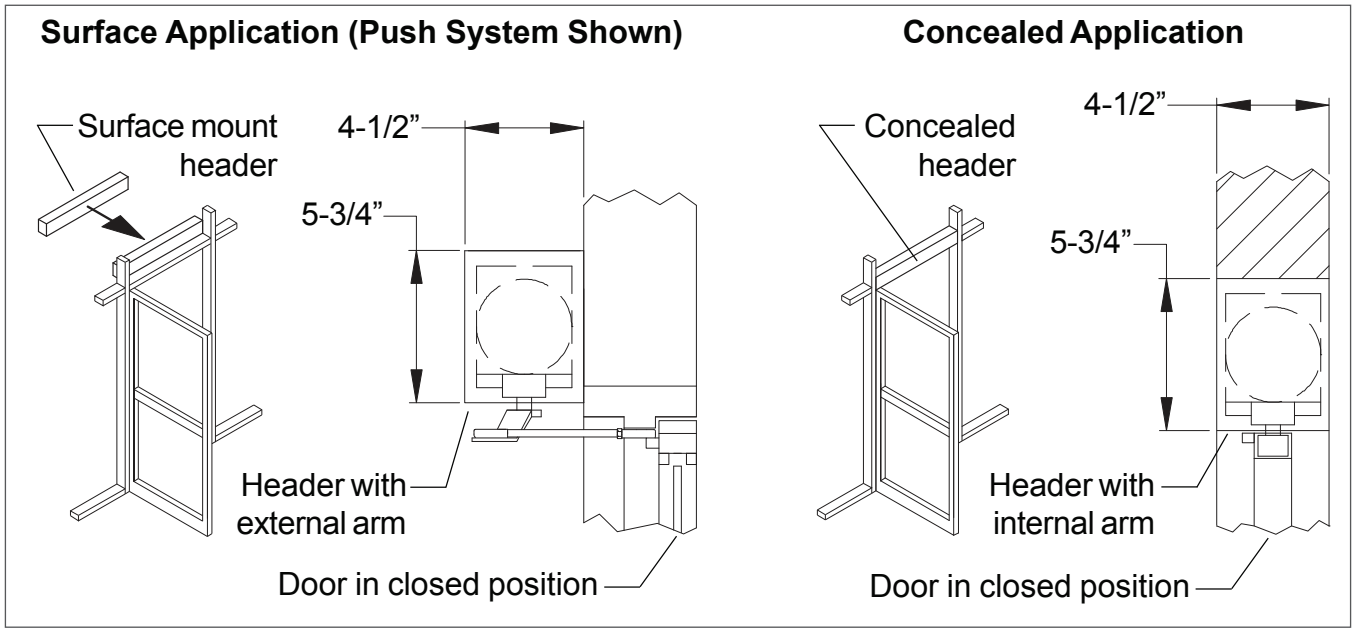


1h For a ramped floor, check that the break in the grade occurs at the edge of the 2” threshold and slopes away from the entrance to allow proper door swing or panic breakaway.

1i Check that a 120 volt, single phase, 60 Hz, fused, 15 amp, 3-wire power supply is available at the side jamb with approximately 12” of wire available to connect to the operator. UL approved type flexible conduit is recommended for the 120 volt power line.
The 120 volt power supply must be a dedicated circuit from the main circuit breaker panel and must not be connected into a building lighting system operating fluorescent lights.

- For concealed applications, continue with “2. Header Installation (Concealed)” on page 5.
- For surface applications, continue with “3. Header Installation (Surface)” on page 6.

## 2 Header Installation (Concealed)

ⓘ **Note: Install concealed application headers so there is 1/8” between the bottom of the header and the top of the door.**

2a Prepare existing jamb tubes using template 740069, then install four 1/4-20 rivet nuts inside each jamb tube.

2b Align the header with the jamb tubes. For headers with a single operator, position the end of the header containing the operator brackets near the pivot side of the opening (Figure 2-1). Secure the header to the jamb tubes with four 1/4-20 hex head screws at each end (Figure 2-2).

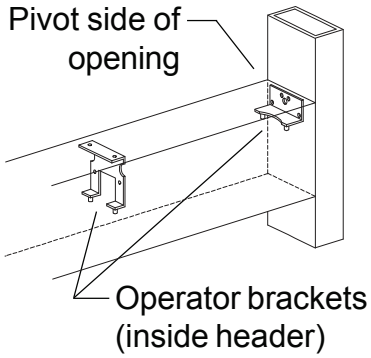


**Figure 2-1**

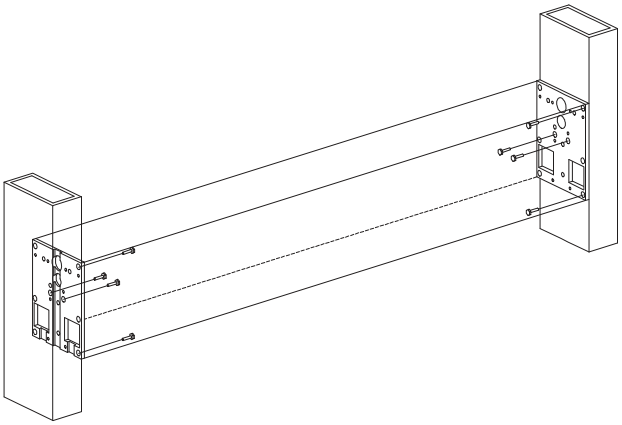

**Figure 2-2**

2c Stand the header/jamb tube assembly in the opening.

2d Feed the 120 volt power conduit into the header (Figure 2-3). Leave 12” minimum of wire inside the header for final hookup.

2e Shim and square the side jamb tubes in position, then secure the jamb tubes in the opening.

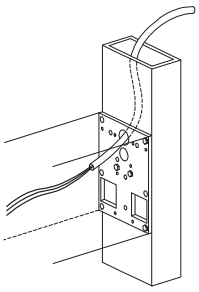

**Figure 2-3**

- Continue with “4. AC Power and Ground Wiring (Surface and Concealed)” on page 8.

## 3 Header Installation (Surface)

3a For a header with two operators (for a simultaneously operated pair of doors), designate one end of the header as the companion operator end. (It does not matter which end.)

3b Refer to Figure 3-1 and step 3.3 and prepare wire access holes appropriate for the application in the header using template 740070. Be sure to position edge “A” of template 740070 as shown in Figure 3-1.

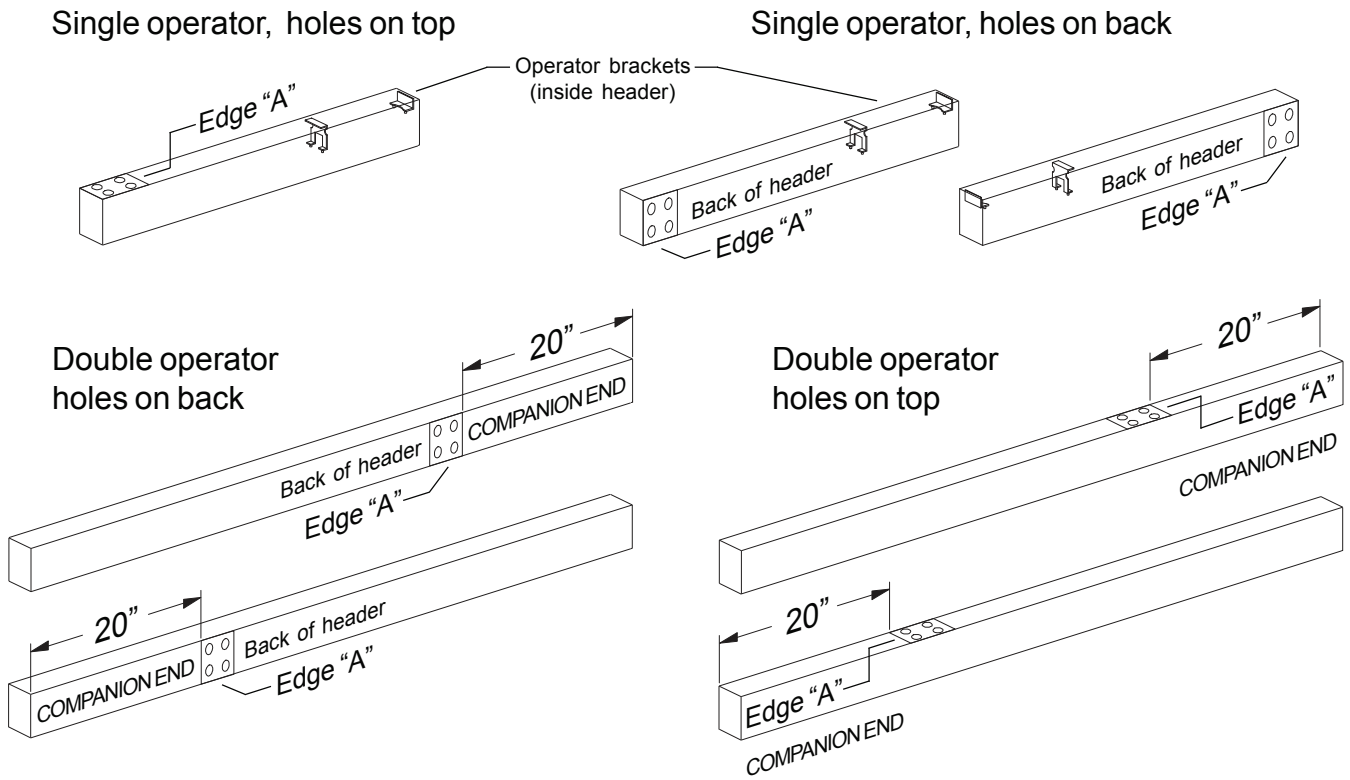


**Figure 3-1**

3c Install horizontal mounting brackets on the header per the instructions supplied with the brackets (Figure 3-2). Make sure the horizontal mounting brackets are oriented so the wire access holes in the header (see step 3.2) face up or face the door and, for single operator headers, the operator brackets inside the header are near the hinge side of the opening.

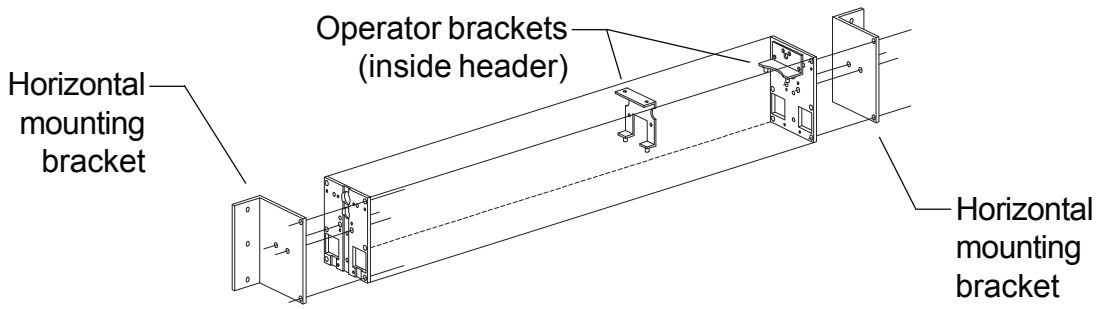


**Figure 3-2**

ⓘ **NOTE: Install surface applied headers with the following spacing between the bottom of the header and the top of the door:**
**Pull arm application: 1-1/8”**
**Push arm application: 1”**

3d For aluminum storefront or aluminum tube frame, install the header with horizontal mounting brackets to the jams per the instructions supplied with the horizontal mounting brackets (Figure 3-3).

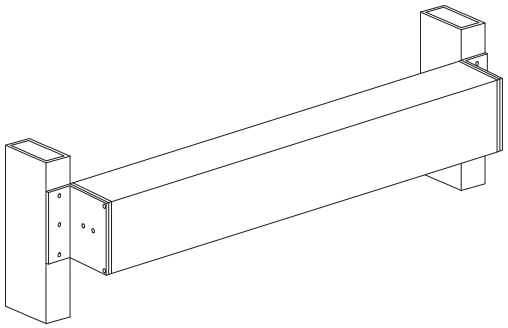

**Figure 3-3**

3e Hollow metal and wood frames require the use of a -18 mounting plate, sold separately (Figure 3-4).

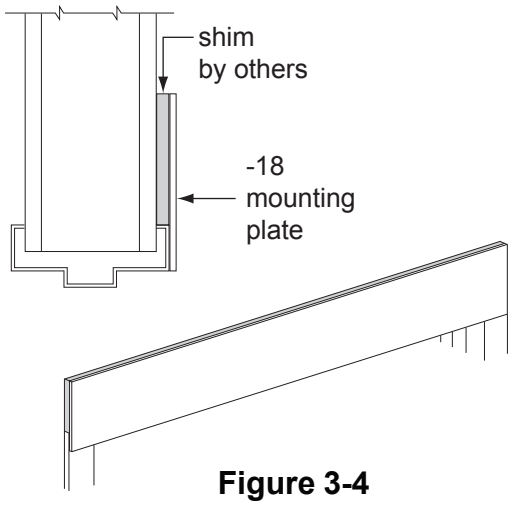


**Figure 3-4**

3f Feed the 120 volt power conduit into the header (Figure 3-5). Leave 12” minimum of wire inside the header for final hookup.

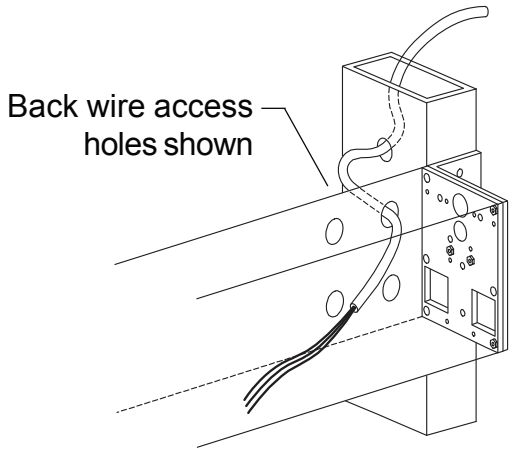


**Figure 3-5**

- Continue with “4. AC Power and Ground Wiring (Surface and Concealed)” on page 8.

## 4 AC Power and Ground Wiring (Surface and Concealed)

4a Connect the 120 volt power wires to the AC power cable (part number 761463) and header end plate as shown in Figure 4-1.

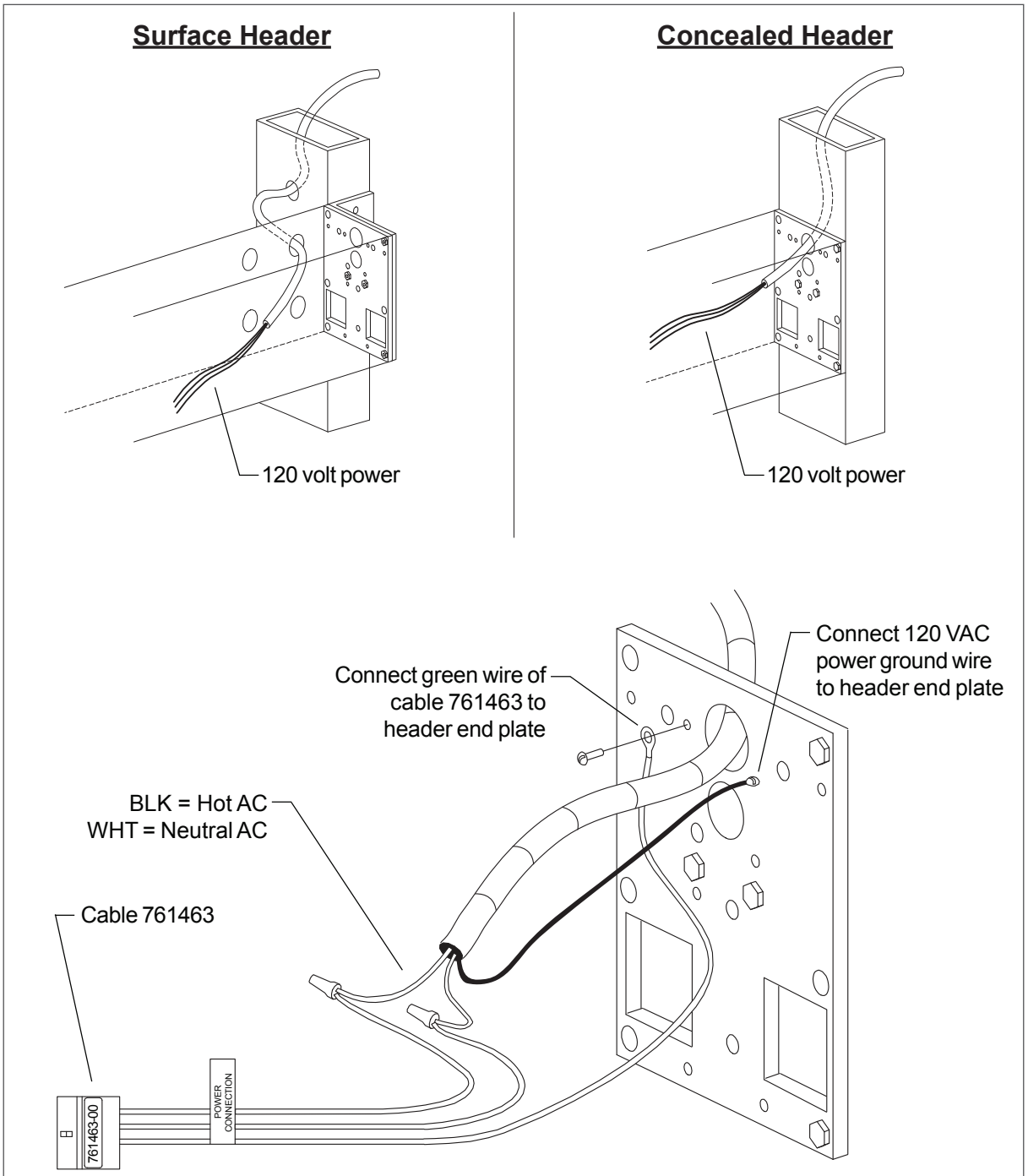


**Figure 4-1**

- Continue with “5. Operator Installation (Surface and Concealed)” on page 9.

## 5 Operator Installation (Surface and Concealed)

5a For double operator systems with differently handed operators, make sure that the correct operator is installed in each end of the header. The handing of the operator (R.H. or L.H.) is indicated on a label on the operator.

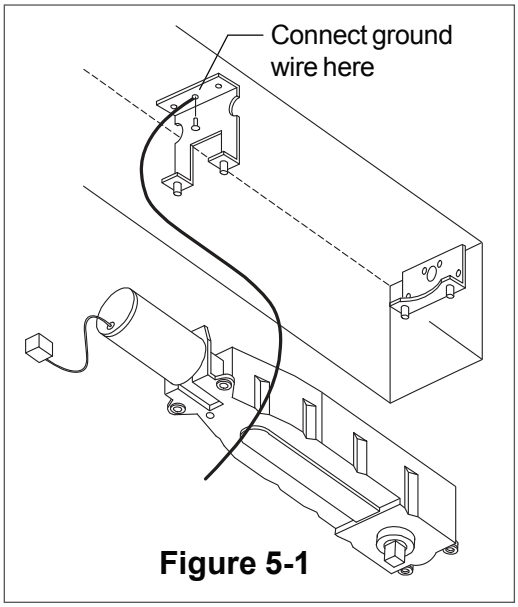


**Figure 5-1**

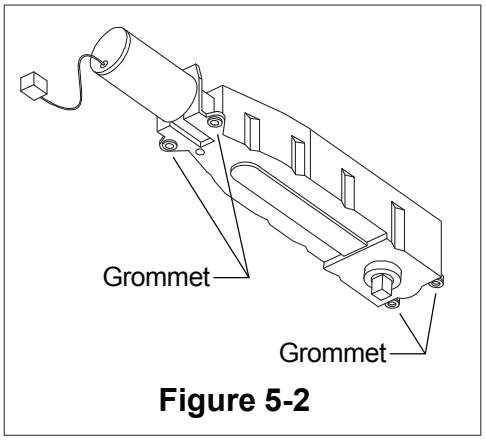


**Figure 5-2**

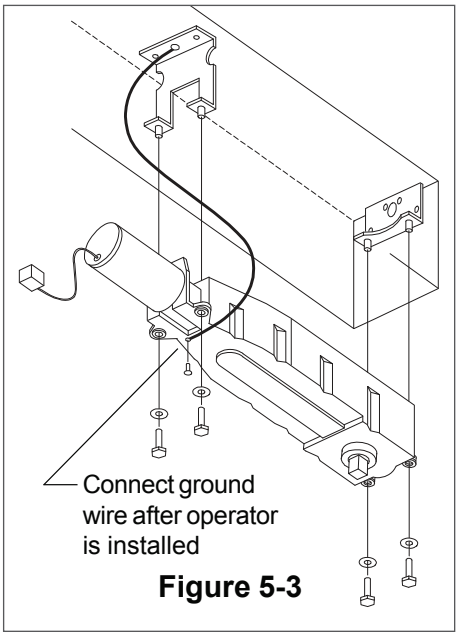


**Figure 5-3**

5b Connect the end of the green operator ground wire to the rear operator mounting bracket in the header (Figure 5-1) using the #10-32 hex head green ground screw supplied in the operator screw pack.

5c Make sure there is a rubber grommet inside each of the four operator mounting holes (Figure 5-2).

5d Line up the four mounting holes on the operator with the four mounting studs on the operator brackets (Figure 5-3). Make sure that the operator cable (with 6-pin connector) is hanging down freely and push the operator up onto the mounting studs. Make sure cables are not pinched when operator is installed. (The mounting studs fit snugly into the grommets, and firm pressure may be required to get the operator into position.)

5e Secure the operator to the header using four 5/16-18 hex head screws and washers (Figure 5-3). Tighten the screws until they make contact with the mounting studs on the operator brackets.

5f Connect the other end of the green ground wire to the small hole in the bottom of the operator (Figure 5-3).

5g For a header with two operators, install the second operator in the same manner.

- For center pivoted doors, continue with “6. Pivot Block Installation (Concealed, Center Pivoted)” on page 10.
- For other doors, continue with “8. Control Box Installation (Surface and Concealed)” on page 12.

## 6 Pivot Block Installation (Concealed, Center Pivoted)

ⓘ **NOTE: This section is applicable ONLY if using the factory supplied lower pivot block (with pivot post attached) on center pivoted doors. If not being used, continue with "7. Breakaway or Fixed Stop Installation (Concealed, Center Pivoted)" on page 11.**

6a Position the lower pivot block (Figure 6-1) as shown in Figure 6-2 oriented so the pivot post is 2-3/4" or 3-3/4" (nominal) from the jamb, as necessary.

6b Use the pivot block as a guide and mark and prepare four mounting holes for appropriate fasteners for the mounting surface.

6c Secure the pivot block in place with appropriate fasteners (Figure 6-3).

ⓘ **NOTE: Pivot block shown installed for a door with a 3-3/4" mounting point. For 2-3/4" mounting point, reverse pivot.**

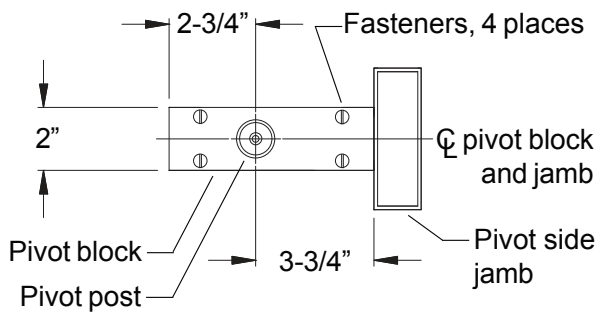


**Figure 6-1.** Top view of lower pivot block.

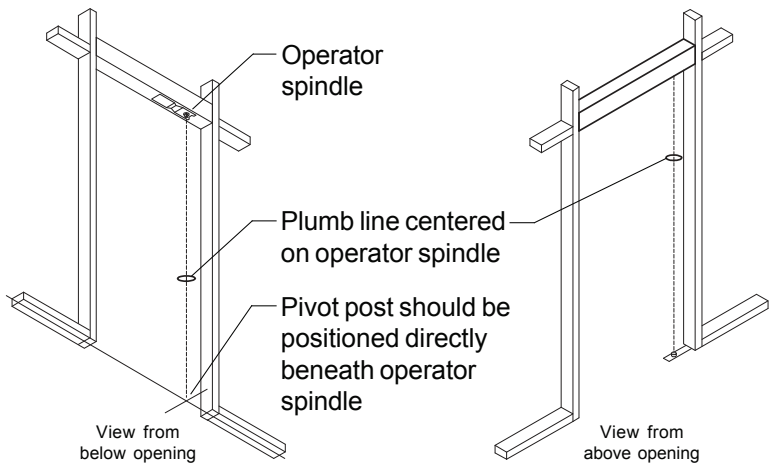


**Figure 6-2**

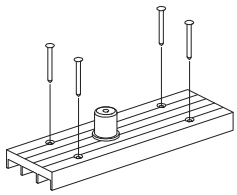

**Figure 6-3**

- Continue with "7. Breakaway or Fixed Stop Installation (Concealed, Center Pivoted)" on page 11.

## 7 Breakaway or Fixed Stop Installation (Concealed, Center Pivoted)

ⓘ **NOTE: This section is applicable ONLY to center pivoted doors using the factory supplied breakaway or fixed stop. If not being used, continue with "8. Control Box Installation (Surface and Concealed)" on page 12.**

**Breakaway and Fixed Stop Operation**

The function of the breakaway or fixed stop is to act as a mechanical stop on an inswinging door so the door cannot normally be opened in the outswinging direction.

The **breakaway stop** differs from the fixed stop in that, in a panic or fire condition, when approximately 50 lbs. of force is applied on the door from the inswinging side, the door will open in the outswinging direction. When this occurs, a switch in the breakaway stop disables the automatic operation of the door. The door then remains inoperative and in the breakaway position until it is manually pushed back through the opening to the inswinging side. This action resets the breakaway stop and restores automatic operation.

7a Orient the breakaway stop according to the directions on the switch label (Figure 7-1). The "OPENING DIRECTION OF DOOR" arrow should point in the direction that the door opens during normal operation.


**Figure 7-1**

7b Install the breakaway or fixed stop inside the header approximately 2-1/4" from the latch end using the four #8-32 x 3/4" screws supplied with the stop (Figure 7-2). Mounting holes for the stop have been prepared in the header at the factory.

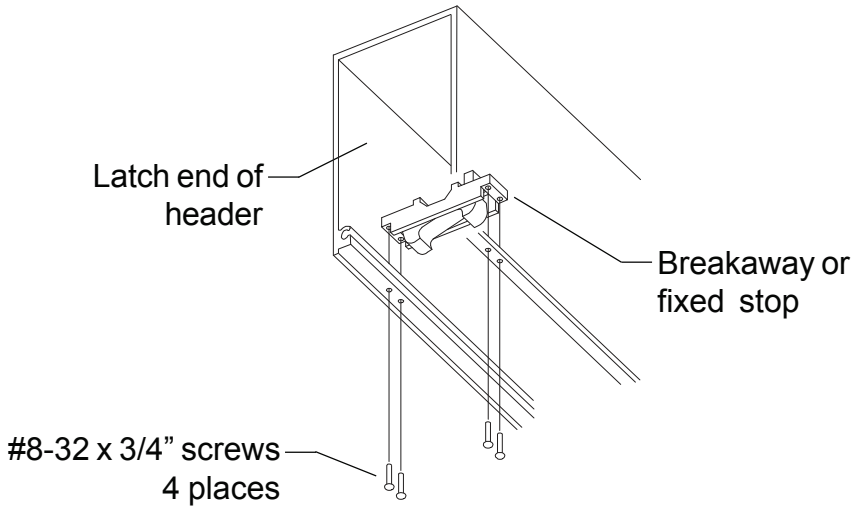


**Figure 7-2**

- Continue with "8. Control Box Installation (Surface and Concealed)" on page 12.

## 8 Control Box Installation (Surface and Concealed)

8a Orient the control box so the keypad faces down and the 6-pin Molex connector faces the operator for a single system or the master operator for a double system (Figure 8-1).

8b Raise the control box into the header and rotate the two mounting bars so they engage the slots that run the length of the header (Figure 8-2).

8c See Figure 8-3 for final positions of operator(s) and control box inside the header.

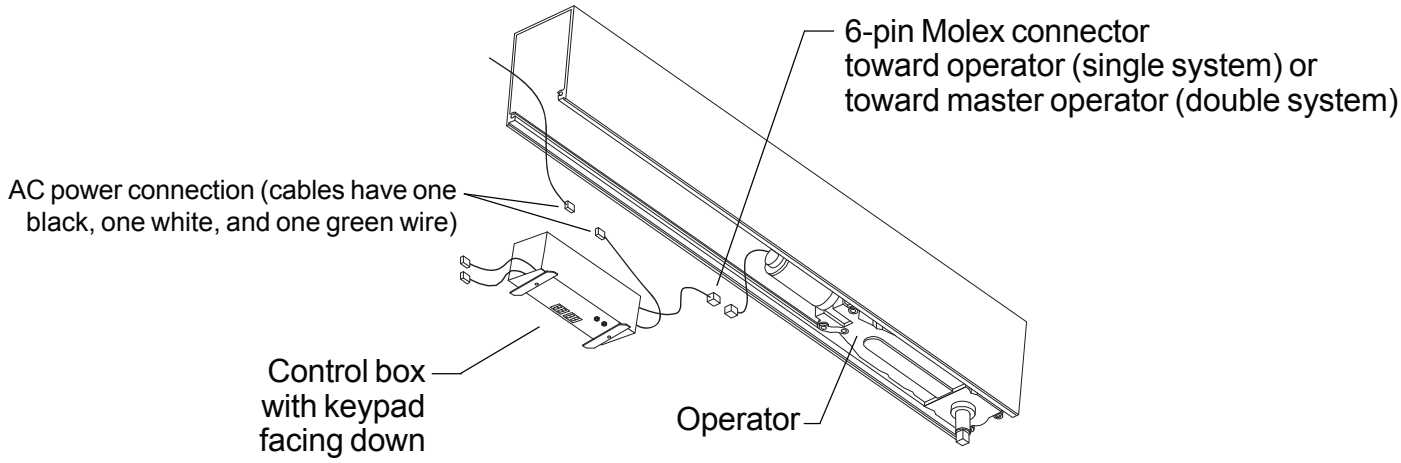


**Figure 8-1**

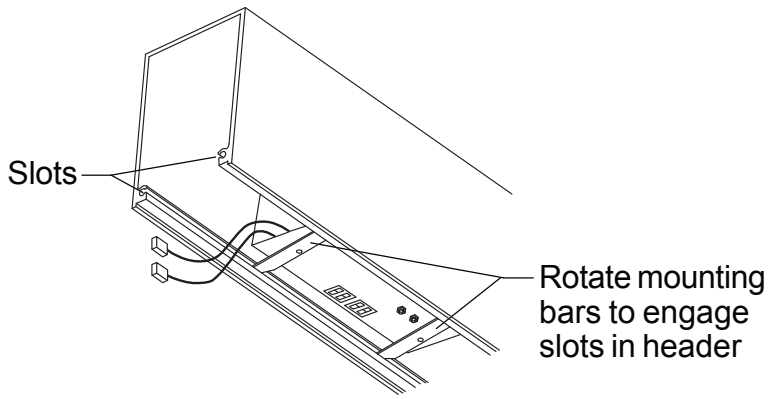


**Figure 8-2**

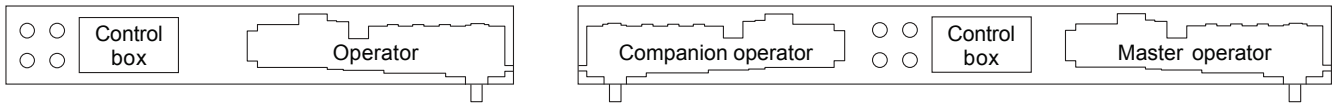


Views from front of header, wire access holes shown on back of header

**Figure 8-3**

• Continue with “9. Control Box Wiring (Surface and Concealed)” on page 13.

## 9 Control Box Wiring (Surface and Concealed)

**⚠ CAUTION ⚠**

**High voltage wiring must be separated from low voltage wiring by UL listed wiring for the control box, operators, and low voltage accessories.**

**⚠ CAUTION ⚠**

**When joining or separating a Molex plug and receptacle, do not push or pull on any of the wires. This may cause a wire to be pulled loose from a terminal, which may result in a malfunction.**

9a Single operator system minimum wiring requirements:

- AC power
- Master motor power
- Breakaway switch or jumper

Double operator system minimum wiring requirements:

- AC power
- Master motor power
- Companion motor power
- Breakaway switches or jumpers; if two Breakaway switches are used, wire switches in series

9b For wiring of companion operator and and additional accessories, see the Senior Swing Control Box installation instructions.

9c Dress all wires neatly together and use clips to retain wires in their proper locations.

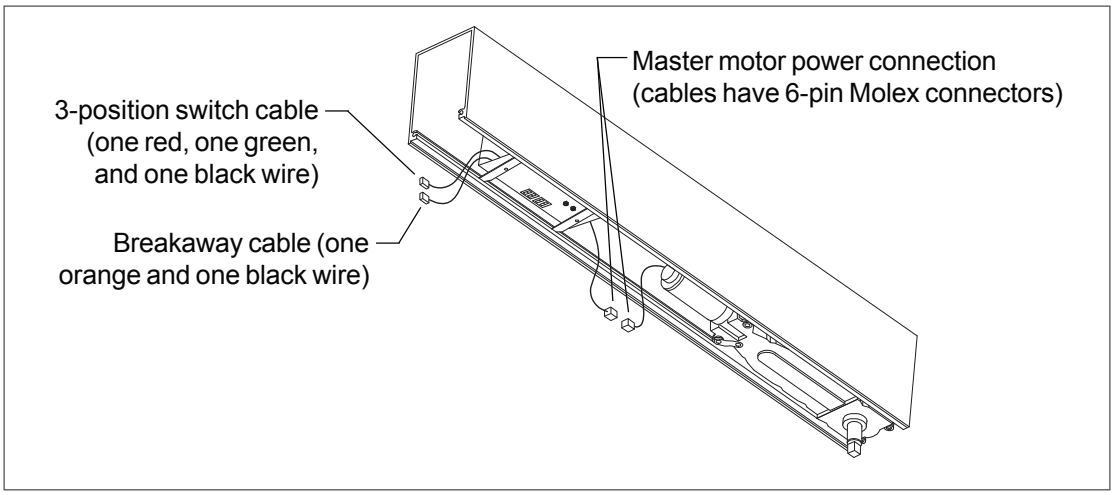


- For center pivoted doors, continue with “10. Finger Guard Installation (Concealed, Center Pivoted)” on page 14.
- For other doors, continue with “12. Arm Installation (Surface and Concealed)” on page 17.

## 10 Finger Guard Installation (Concealed, Center Pivoted)

ⓘ **NOTE: This section is applicable ONLY to center pivoted doors using the factory supplied finger guard. If not being used, continue with "11. Door and Arm Installation (Concealed, Center Pivoted)" on page 15.**

10a Scribe a line down the center of the pivot side door jamb (Figure 10-1).

10b If necessary, cut down the finger guard to fit the installation.

10c Align the center of the finger guard over the scribed line. Use the screw holes in the finger guard as guides to locate the mounting holes, and drill #21 (0.159" dia.) mounting holes in the door jamb.

10d Secure the finger guard to the door jamb with #10 self-threading screws.

10e Make sure there is one mounting screw approximately 1" from each end of the finger guard. If necessary, drill additional mounting holes in the finger guard and door jamb in these locations and install #10 self-threading screws.

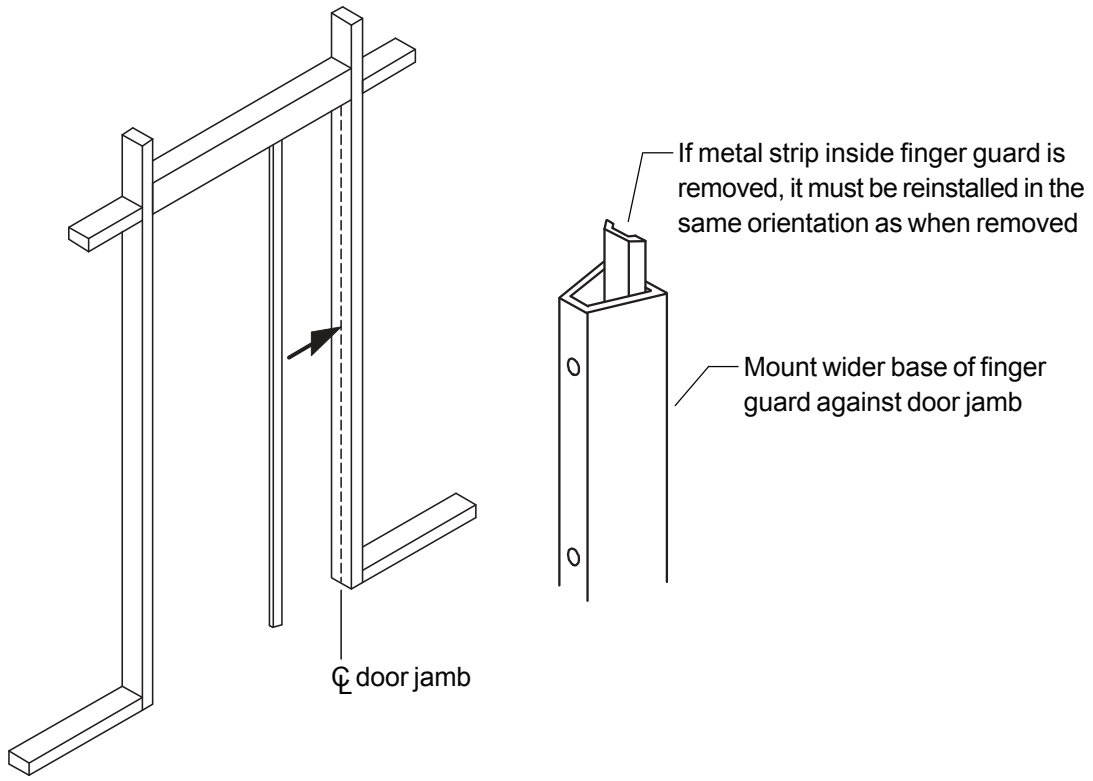


**Figure 10-1**

- Continue with "11. Door and Arm Installation (Concealed, Center Pivoted)" on page 15.

## 11 Door and Arm Installation (Concealed, Center Pivoted)

11a Prepare door for arm (Figure 11-1).

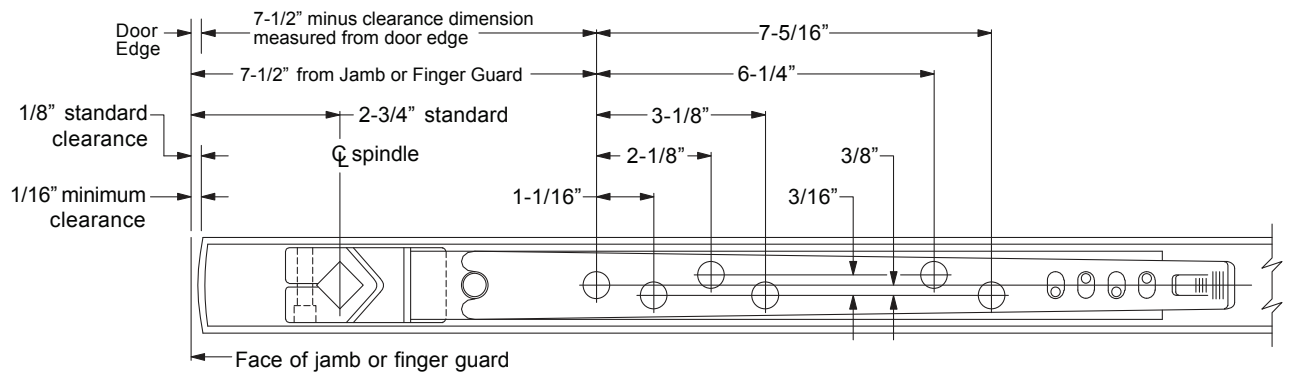


**Figure 11-1**

11b Install top arm and bottom pivot using screws supplied with those components (Figure 11-2). Use machine screws for metal door; use wood screws for wood door.

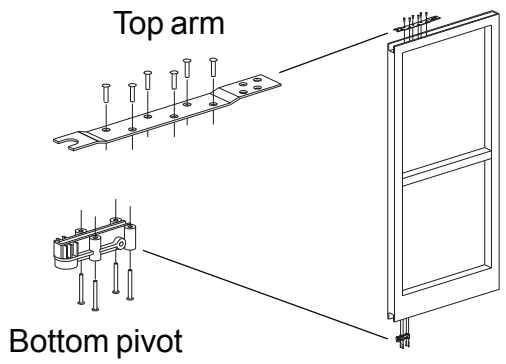


**Figure 11-2**

11c Orient the arm in the breakout position (Figure 11-3). Install the arm in the breakout position by pressing the arm onto the spindle until the end of the spindle is flush with the bottom surface of the arm (Figure 11-4). Tighten the Allen head cap screw on the arm (Figure 11-4).

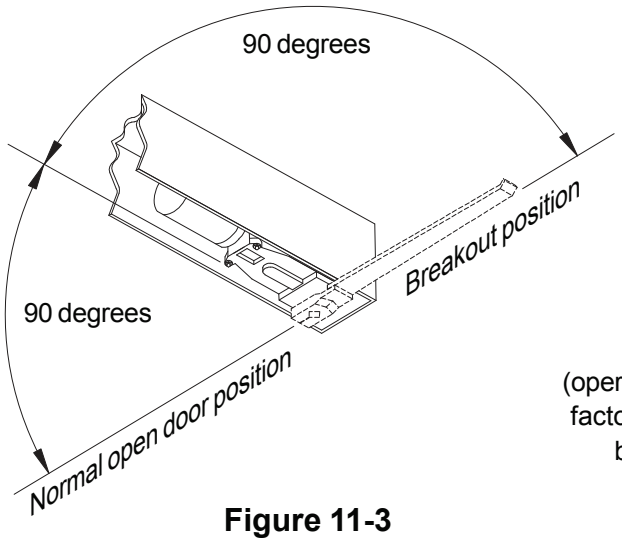


**Figure 11-3**

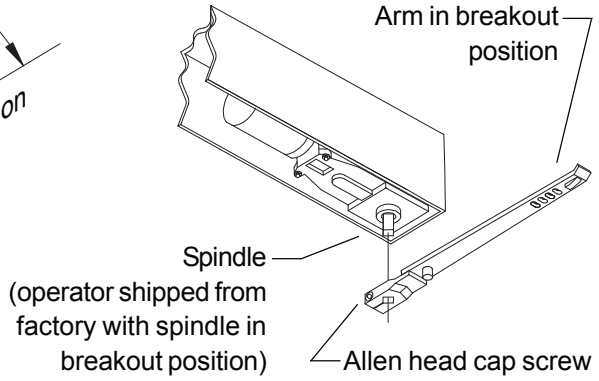


**Figure 11-4**

11d Position the door so the arm is in the top channel of the door and gently slide the door up against the lower pivot (Figure 11-5).

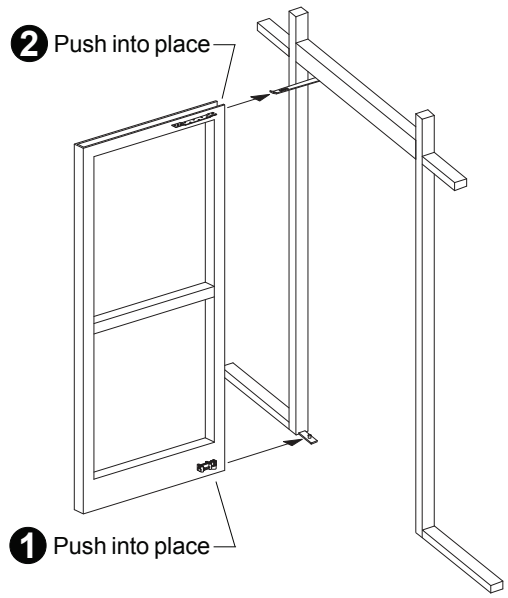


**Figure 11-5**

11e Lift the door slightly and push back until the bottom pivot locks into place.

11f Raise the nose of the door and push back until the top arm snaps into place.

11g Align the door in the open position (perpendicular to the opening).

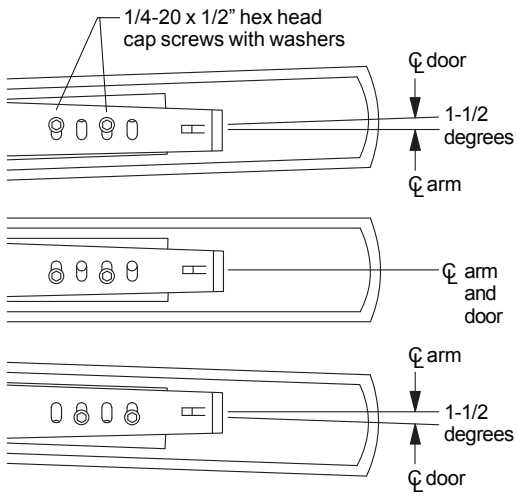


**Figure 11-6**

11h Install two 1/4-20 x 1/2" hex head cap screws and washers through two of the oval holes in the arm and into the top attachment arm (Figure 11-6).

11i Install screws in whichever of the positions shown align with the door in the open position (perpendicular to the opening).

11j Check door operation by pushing door to normal closed position, continue pushing through breakaway stop to 90 degree open position, and then release door. Door should close.

**⚠ CAUTION ⚠**

**If the operator is not connected to the control box, the door will slam closed when released.**

- Continue with "13. Glazing (Surface and Concealed)" on page 17.

## 12 Arm Installation (Surface and Concealed)

| Surface | Concealed |
|---|---|
| Push Arm: For surface header applications. To install, see separate instructions for Push Arm & Link Assembly.<br> 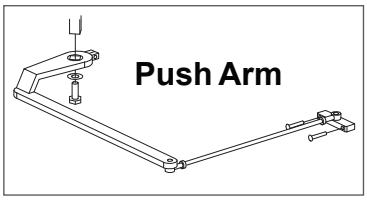 <br> | Offset Arm: For concealed header applications with butt hung and offset pivoted doors. To install:<br>1. Prepare door and install slide channel (see separate Installation Instructions for Offset Arm).<br>2. Note position of operator spindle. Turn on operator power. Momentarily short activation wires so spindle slowly rotates toward full open position and stops. Continue doing this until spindle reaches full open position (refer to Figure 11-3), then join activation wires together with a wire nut.<br>3. Insert arm slide into slide channel, slide arm onto spindle, and tighten arm Allen head cap screw.<br>4. Remove wire nut from activation wires; turn off power.<br> 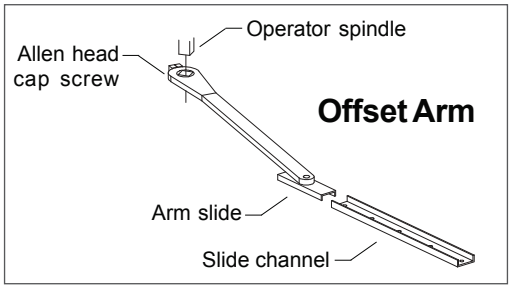 <br> |
| Pull Arm: For surface header applications, see separate instructions for Pull Arm Assembly.<br> 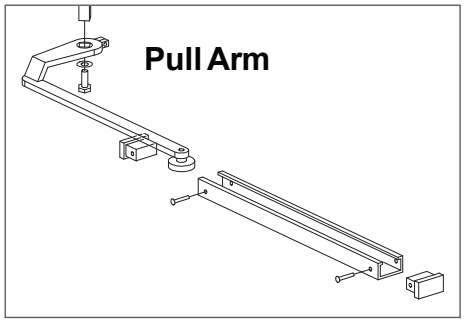 <br> | |

- Continue with “13. Glazing (Surface and Concealed)”

## 13 Glazing (Surface and Concealed)

| ⚠ CAUTION ⚠ | ⚠ CAUTION ⚠ |
|---|---|
| **Glazing material must comply with the ANSI standard specification.** | **Operator speed adjustments cannot be set properly until after the door is glazed.** |

- Continue with “14. Control Box Functions (Surface and Concealed)”

## 14 Control Box Functions (Surface and Concealed)

To set control box functions, see the Senior Swing Control Box installation instructions.

- Continue with “15. Plate Installation (Surface and Concealed)” on page 18.

## 15 Plate Installation (Surface and Concealed)

| Surface | Concealed |
|---|---|
| 1. Install spindle plate and filler plate (Figure 15-1). Spindle platecutout fits over operator spindle.<br> 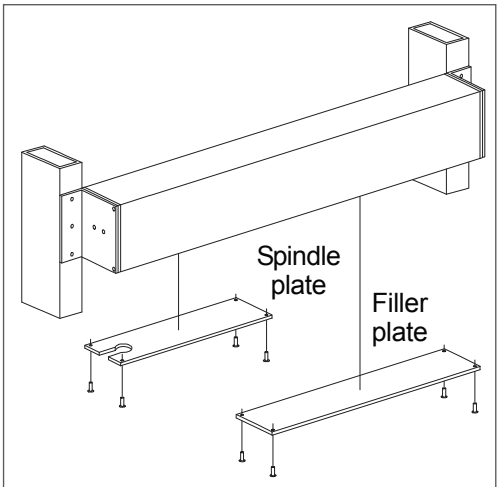 <br><br>**Figure 15-1** | For concealed header applications using offset arm with butt hung and offset pivoted doors only:<br>1. Prepare header dress plates for concealing channel (Figure 15-2; see separate Installation Instructions for Offset Arm).<br>2. Install concealing channel (Figure 15-2).<br> 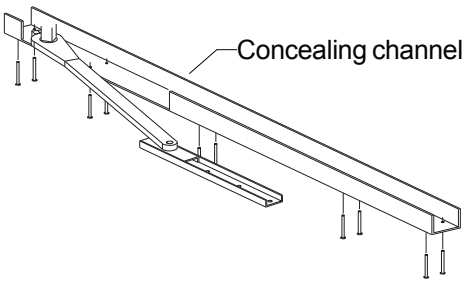 <br><br>**Figure 15-2** |

- Continue with “16. Release for Service (Surface and Concealed)”

## 16 Release for Service (Surface and Concealed)

16a Remove all tools, installation equipment, and debris from the vicinity of the door.

16b Install all safety, traffic control, and instruction decals on the door as required by the latest revision of ANSI/BHMAA156.19 for the Senior Swing. This is very important! Failure to do this leaves the installer LIABLE for any accident that might occur. This must be done!

16c Verbally instruct the owner or person in charge of the proper operation of the door.

16d Instruct the owner or person in charge to routinely inspect the door for occasional damage, developing problems, minor preventive maintenance.

16e Instruct the owner or person in charge who and where to call for service when required.

**⚠ IMPORTANT ⚠**

**Make sure to install all safety, traffic control, and instruction decals on the door as required.**

**Customer Service**

1-877-671-7011 www.allegion.com/us

ALLEGION


Printed in U.S.A.
740132 Rev. 06/16-h

740100

2800 Overhead Consealed Series
9500 Surface Applied Series

# Senior Swing Control Box

LCN®

Installation Instructions

**⚠ IMPORTANT ⚠**

**These instructions are presented in step-by-step sequence. It is very important that installation begins with "1. Pre-Installation Site and Product Check" (page 3) and continues as directed after each section.**

**⚠ WARNING ⚠**

**Always disconnect main power to the operator prior to replacing.**

**Control box contains no serviceable parts inside.**

## Table of Contents


General Information ..... 1
Electrical Specifications ..... 2
1 Pre-Installation Site and Product Check ..... 2
2 Installation ..... 3
3 Wiring ..... 3
4 Keypad Settings ..... 7
5 System Test ..... 11
6 Troubleshooting ..... 12
7 Release for Service ..... 13


## General Information

The Senior Swing Control Box is for use with the Senior Swing Power Operator System. The system can operate a single door (2810, 9530, and 9540 Series), a simultaneous pair of doors (2850 and 9550 Series), or an independent pair of doors (2860 and 9560 Series).

**ANSI/BHMA A156.19 Compliance**

The Senior S wing Power Operator System is a low energy product and must conform to the latest version of ANSI/BHMA A156.19 (American National Standard for Power Assist and Low Energy Power Operated Doors).

**Installation Instructions**

All installation instructions are valuable references and should be given to the building owner or maintenance supervisor after installation is complete.

The Senior Swing Control Box installation instructions and the manufacturer's instruction manual accompanying any sensor must be referenced to ensure proper installation, setup, and operation.

## Electrical Specifications

AC input voltage ..... 120 VAC
AC fuse ..... 120 VAC, 2.5 A time-delay fuse
Motor protection ..... Solid state failure detection and shutdown
Activate inputs ..... dry NO contacts (close contacts to open door)
Safety inputs ..... dry NO contacts (closed contacts indicate an obstruction)
Breakaway input ..... dry NC contacts (open contacts indicate breakaway)
3-position switch input ..... dry 3-position switch
Power Boost disable input ..... dry NO contacts (close contacts to disable Power Boost)
Lock output ..... Form C dry relay contacts rated 8 A, 30 VDC maximum
Accessory power output ..... 24 VAC, 1.5 A (protected by resettable thermal fuse)
Logic power output ..... 5 V, 50 mA (protected by resettable thermal fuse)

## 1 Pre-Installation Site and Product Check

**⚠ IMPORTANT ⚠**

**Factory Authorized Door Leaf Size and Weight**

| Type | Width per Leaf | Maximum Weight per Leaf |
|---|---|---|
| Single Door | 36” to 48” | 200 lb. |
| Simultaneous Pair | 30” to 48” | 200 lb. |

1a All required installation steps listed before “8. Control Box Installation” in the Senior Swing installation instructions should be completed before installing the Senior Swing control box.

1b Check that the control box model (indicated on control box label; Figure 1-1) is correct for the application.

1c Check that the available AC voltage matches the control box voltage requirement (120 VAC).

1d Check that all accessories required for the application are on hand.

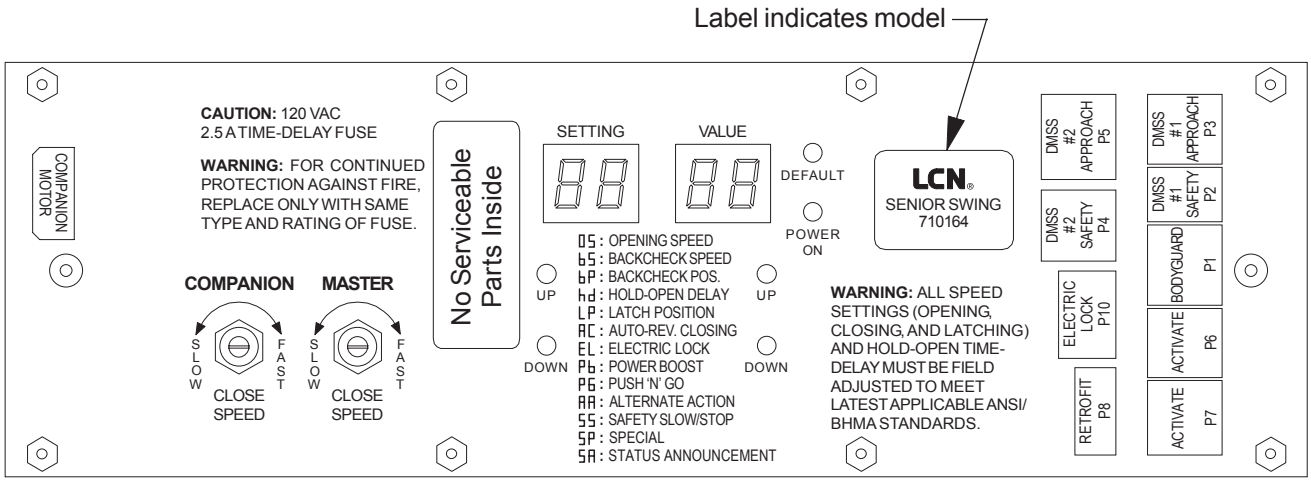


**Figure 1-1**

## 2 Installation

To install the Senior Swing Control Box, follow the Senior Swing installation instructions beginning with “8. Control Box Installation” on page 12 of those instructions.

**⚠ CAUTION ⚠**

**Improper installation or set up may result in personal injury or property damage. Follow instructions carefully. For answers to questions, call 1-877-671-7011**

## 3 Wiring

- Review the separate wiring diagrams in the accessory instructions so that all wiring can be completed.
- See Figure 3-1 for system configuration terminology.
- See Figure 3-2, Figure 3-3, and Figure 3-4 for names and locations of control box connectors.
- See Figure 3-5 for control box plug and jack descriptions, wiring, and mating cables.
- See Figure 3-6 for electric strike locking device sample wiring.
- See Figure 3-7 for EL (electric latch retraction) locking device sample wiring.

**⚠ CAUTION ⚠**

**When joining or separating a plug and receptacle, do not push or pull on wires. This may cause a wire to be pulled loose from a terminal, which may result in a malfunction.**

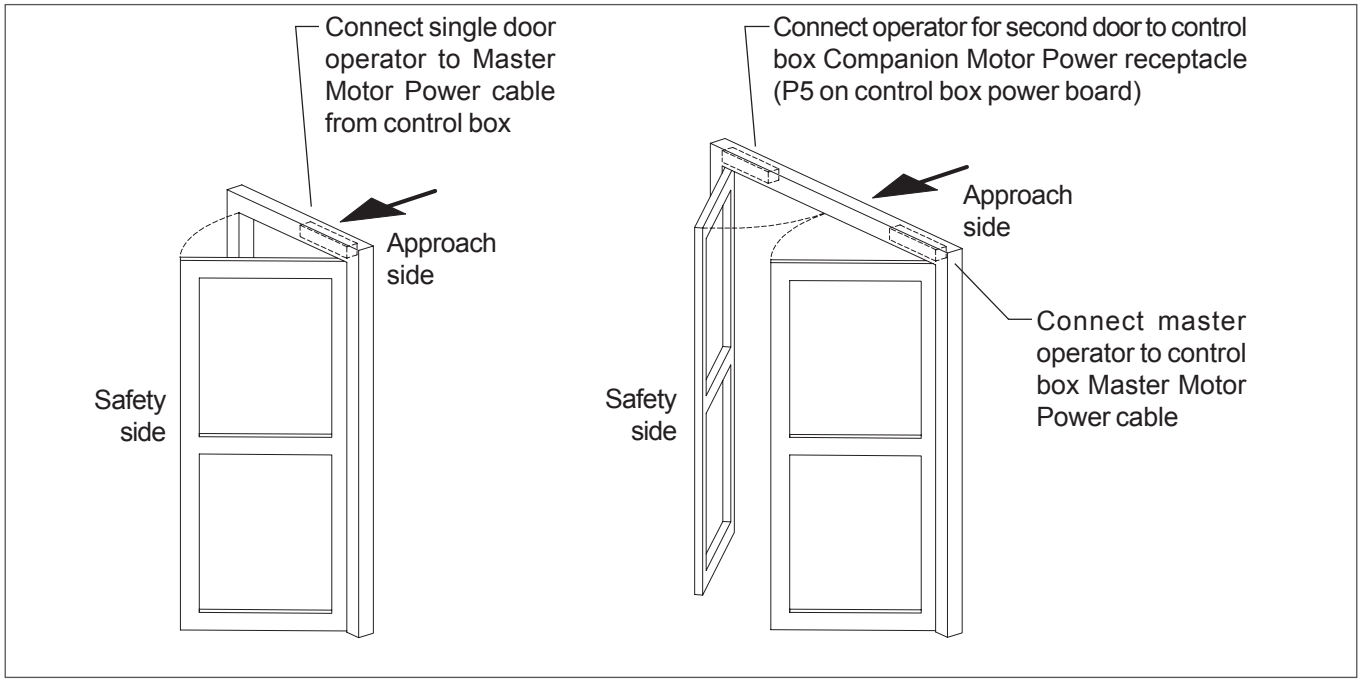

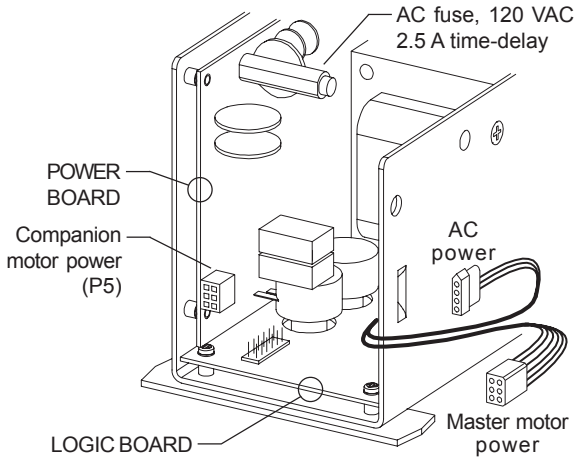


**Figure 3-2.** Control box power board connectors.

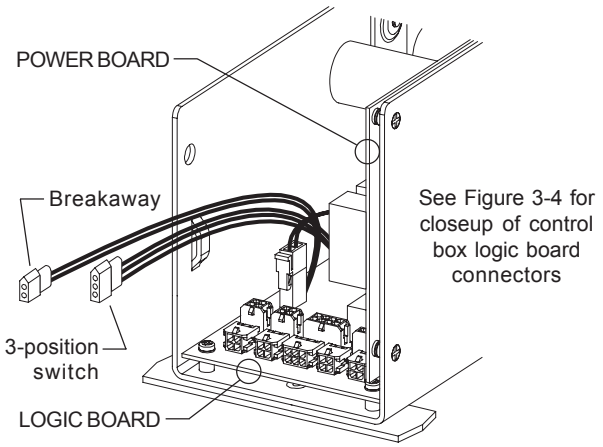


**Figure 3-3.** Control box logic board connectors.

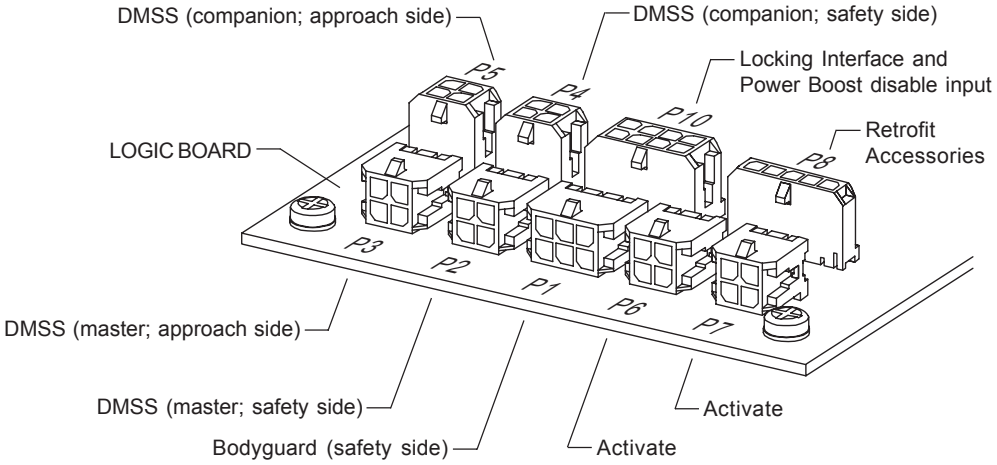


**Figure 3-4.** Closeup of control box logic board connectors.

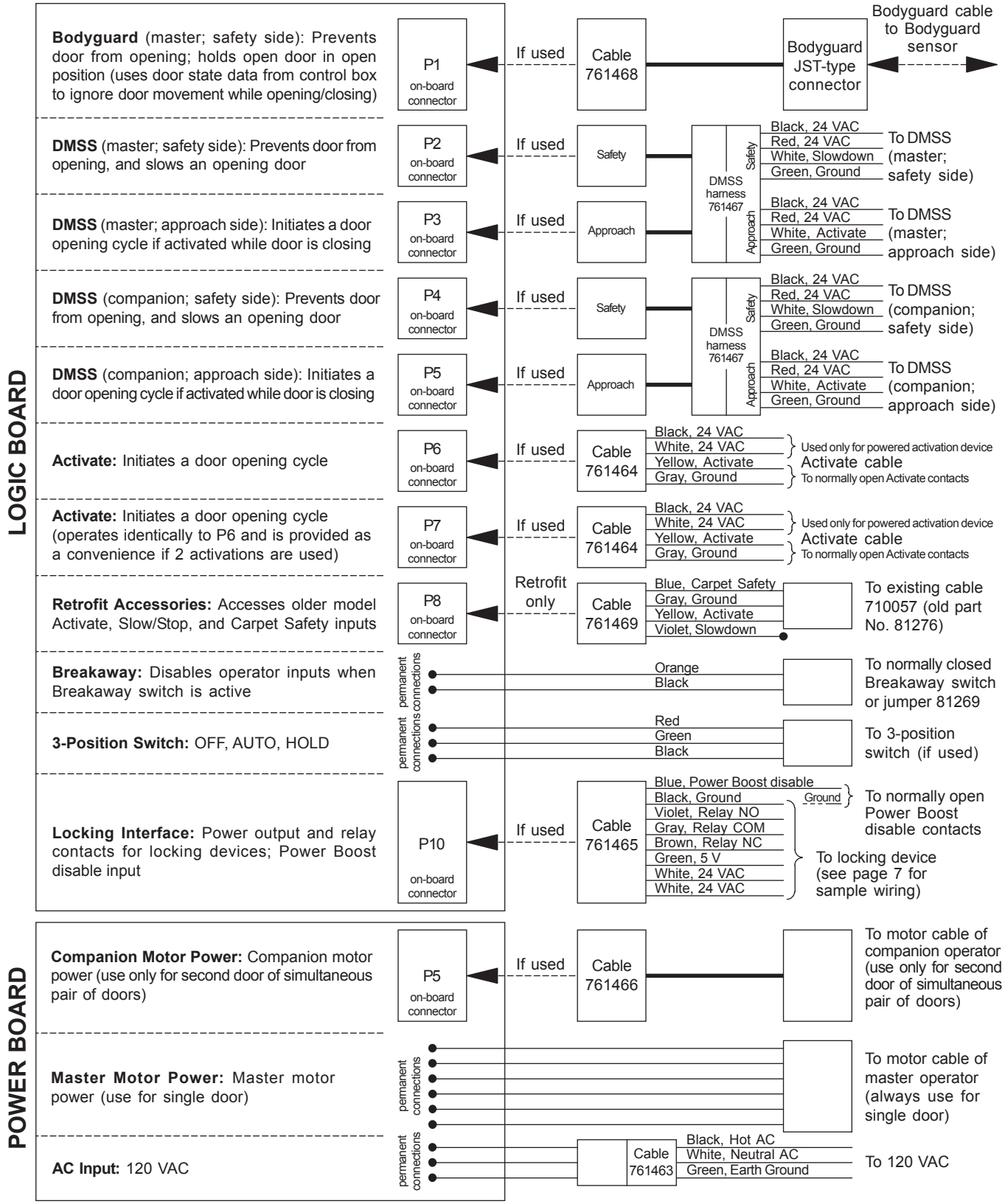
LOGIC BOARD
Bodyguard (master; safety side): Prevents door from opening; holds open door in open position (uses door state data from control box to ignore door movement while opening/closing)
P1 on-board connector
If used
Cable 761468
Bodyguard JST-type connector
Bodyguard cable to Bodyguard sensor
DMSS (master; safety side): Prevents door from opening, and slows an opening door
P2 on-board connector
If used
Safety
DMSS (master; approach side): Initiates a door opening cycle if activated while door is closing
P3 on-board connector
If used
Approach
DMSS harness 761467
Safety
Approach
Black, 24 VAC
Red, 24 VAC
White, Slowdown
Green, Ground
To DMSS (master; safety side)
Black, 24 VAC
Red, 24 VAC
White, Activate
Green, Ground
To DMSS (master; approach side)
DMSS (companion; safety side): Prevents door from opening, and slows an opening door
P4 on-board connector
If used
Safety
DMSS (companion; approach side): Initiates a door opening cycle if activated while door is closing
P5 on-board connector
If used
Approach
DMSS harness 761467
Safety
Approach
Black, 24 VAC
Red, 24 VAC
White, Slowdown
Green, Ground
To DMSS (companion; safety side)
Black, 24 VAC
Red, 24 VAC
White, Activate
Green, Ground
To DMSS (companion; approach side)
Activate: Initiates a door opening cycle
P6 on-board connector
If used
Cable 761464
Black, 24 VAC
White, 24 VAC
Yellow, Activate
Gray, Ground
Used only for powered activation device
Activate cable
To normally open Activate contacts
Activate: Initiates a door opening cycle (operates identically to P6 and is provided as a convenience if 2 activations are used)
P7 on-board connector
If used
Cable 761464
Black, 24 VAC
White, 24 VAC
Yellow, Activate
Gray, Ground
Used only for powered activation device
Activate cable
To normally open Activate contacts
Retrofit Accessories: Accesses older model Activate, Slow/Stop, and Carpet Safety inputs
P8 on-board connector
Retrofit only
Cable 761469
Blue, Carpet Safety
Gray, Ground
Yellow, Activate
Violet, Slowdown
To existing cable 710057 (old part No. 81276)
Breakaway: Disables operator inputs when Breakaway switch is active
permanent connections
Orange
Black
To normally closed Breakaway switch or jumper 81269
3-Position Switch: OFF, AUTO, HOLD
permanent connections
Red
Green
Black
To 3-position switch (if used)
Locking Interface: Power output and relay contacts for locking devices; Power Boost disable input
P10 on-board connector
If used
Cable 761465
Blue, Power Boost disable
Black, Ground
Ground
To normally open Power Boost disable contacts
Violet, Relay NO
Gray, Relay COM
Brown, Relay NC
Green, 5 V
White, 24 VAC
White, 24 VAC
To locking device (see page 7 for sample wiring)
POWER BOARD
Companion Motor Power: Companion motor power (use only for second door of simultaneous pair of doors)
P5 on-board connector
If used
Cable 761466
To motor cable of companion operator (use only for second door of simultaneous pair of doors)
Master Motor Power: Master motor power (use for single door)
permanent connections
To motor cable of master operator (always use for single door)
AC Input: 120 VAC
permanent connections
Cable 761463
Black, Hot AC
White, Neutral AC
Green, Earth Ground
To 120 VAC

**Figure 3-5**

ⓘ **NOTE: Always wire the locking device to the NO (normally open) contact of the control box locking interface and use the keypad to set the EL (electric lock) setting to either SA (fail safe) or SE (fail secure).**

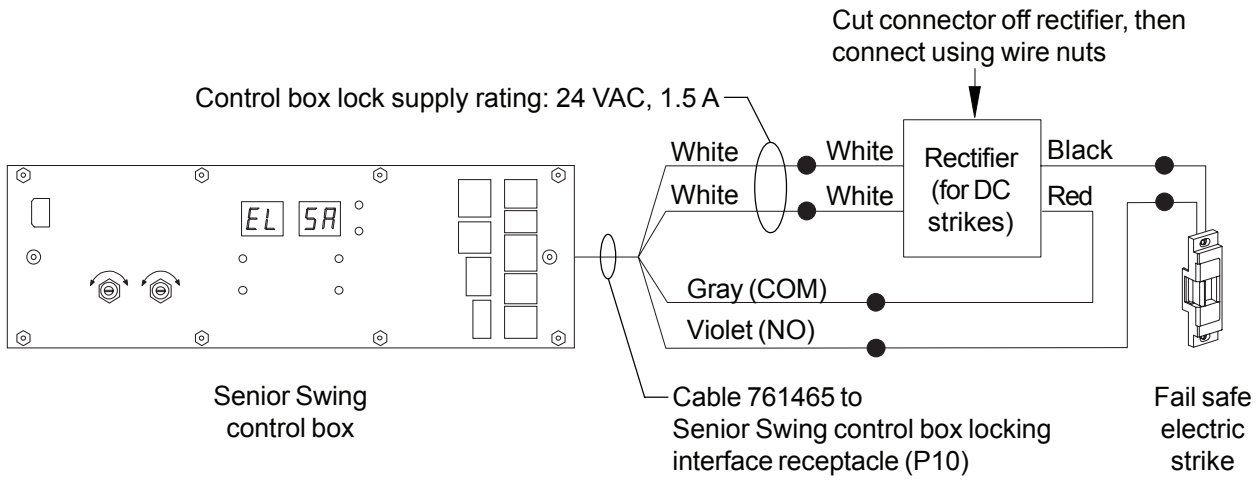


The keypad EL (electric lock) setting is SA (fail safe). When the operator is on, the strike is locked when the door is closed and unlocked when the door is opening. When the 3-position switch is set to OFF, the strike is unlocked.

**Figure 3-6.** Sample Wiring for a Fail Safe Electric Strike Locking Device

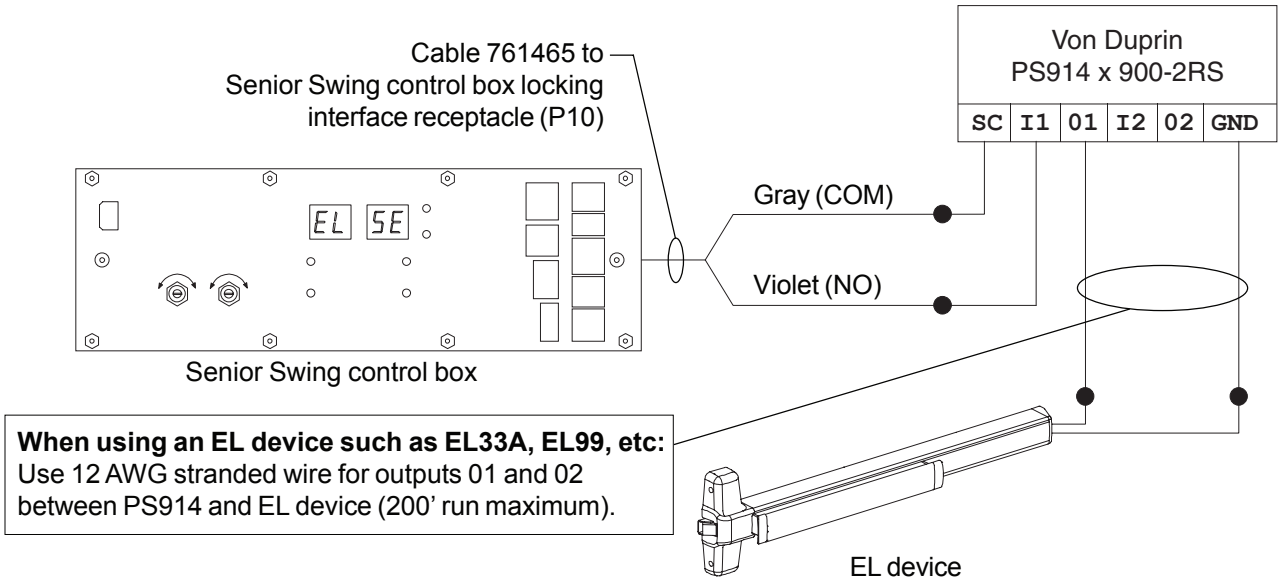


The keypad EL (electric lock) setting is SE (fail secure). The control box locking relay signals the PS914 x 900-2RS. When the operator is on, the EL device is locked when the door is closed and unlocked when the door is opening. When the 3-position switch is set to OFF, the EL device is locked.

**Figure 3-7.** Sample Wiring for a Fail Secure EL (Electric Latch Retraction) Locking Device

# 4 Keypad Settings

Settings (except for close speed) for the Senior Swing Power Operator System are changed using keypad pushbuttons and an alphanumeric display on the control box (Figure 4-1 and Figure 4-2). Close speed is changed using dials on the control box (Figure 4-1).

See page 9 and page 10 for directions for changing the values of settings.

**⚠ CAUTION ⚠**

**Adjust the operator for the slowest operation practical in accordance with the latest revisions of Americans with Disabilities Act, ANSI/BHMA A156.19 (American National Standard for Power Assist and Low Energy Power Operated Doors), and local codes.**

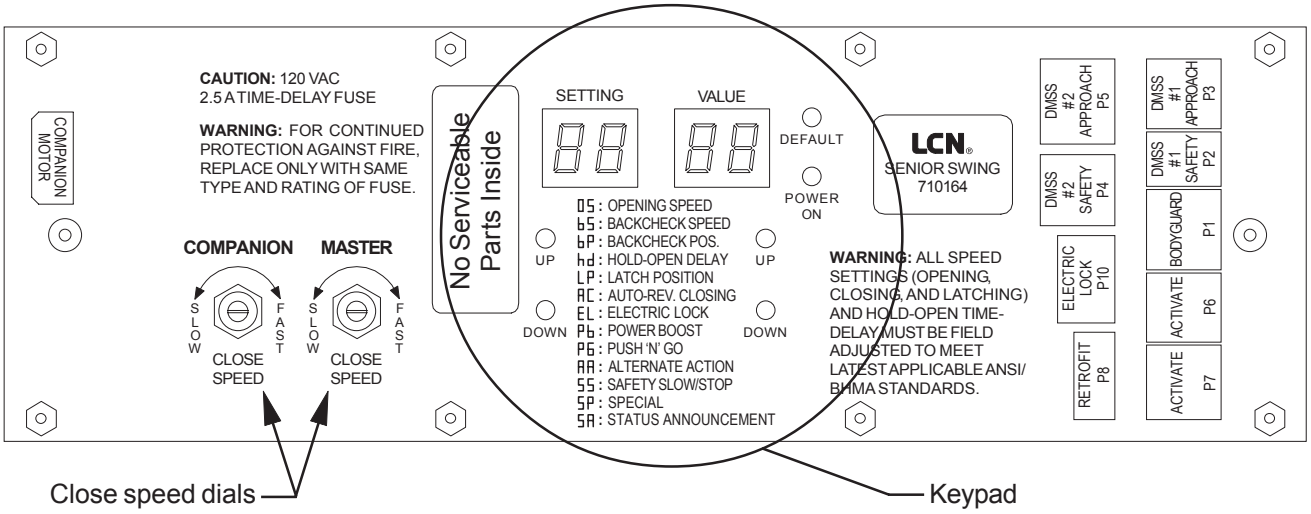


**Figure 4-1.** Control Box Panel with Keypad

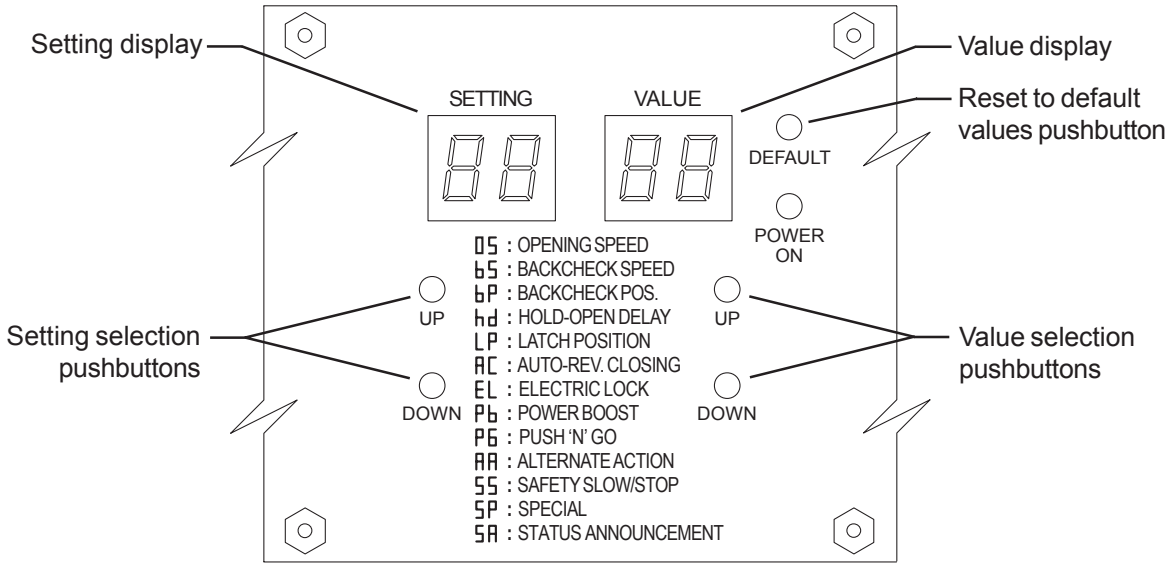


**Figure 4-2.** Closeup of Control Box Keypad

**⚠ WARNING ⚠**

**KEEP HANDS, CLOTHING, WIRES, TOOLS, LADDERS, ETC. AWAY FROM THE DOOR WHEN THE OPERATOR IS INITIALLY TURNED ON.**

See Figure 4-3 for definitions of the positions of the door throughout the opening and closing cycle.

See Table 4-1 for explanations of the keypad settings.

**To change setting values:**

1. Set the 3-position switch, if used, to OFF.
2. Apply AC power. The POWER light will illuminate and the display will remain blank.
3. Press any two pushbuttons at the same time for 1 second to turn on the keypad. The display will illuminate.
4. Press the UP or DOWN setting selection pushbutton to select the desired setting. The setting is shown in the SETTING display, and the current value for that setting is shown in the VALUE display.
5. Press the UP or DOWN value selection pushbutton to select the desired value for the displayed setting. The value for the setting is indicated in the VALUE display.
6. The keypad will automatically turn off after 5 minutes of inactivity.

**To reset all values to default (default values are listed in Table 4-1 under "Selectable Values"):**

1. Set the 3-position switch, if used, to OFF.
2. Apply AC power. The POWER light will illuminate, and the display will remain blank.
3. Press any two pushbuttons at the same time for 1 second to turn on the keypad. The display will illuminate.
4. Press the DEFAULT pushbutton for 4 seconds.
5. The values are set to default, and the display will indicate the opening speed setting and value.
6. The keypad will automatically turn off after 5 minutes of inactivity.

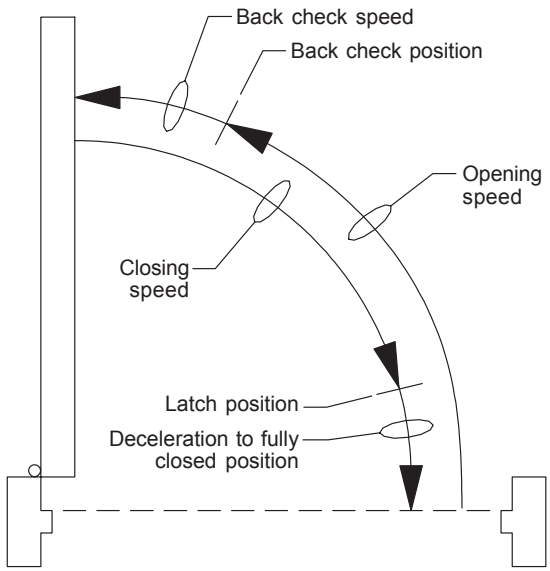


**Figure 4-3.** Door Position Definitions

**Safety side Door Mounted Safety Sensor (DMSS) disable feature**

**Purpose:**

Deactivate the Door Mounted Safety Sensor (DMSS) on safety side of door to eliminate nuisance detection of a wall or guard rail.

1. Install control box, all door hardware and safety devices per their instructions.
2. Setup DMSS sensors in accordance with ANSI standard 156.10.
3. Use keypad to set SAFETY SLOW/STOP (SS) value to STOP (SP).
4. Use keypad to set SLOWDOWN DISABLE (SD) value to 85.
5. Activate door opening cycle. If door does not open fully, use keypad to reduce SD value from 85 in 5 degree increments.
6. Repeat Step 5 until door opens fully.
7. Perform a complete system test as described in the section 5.

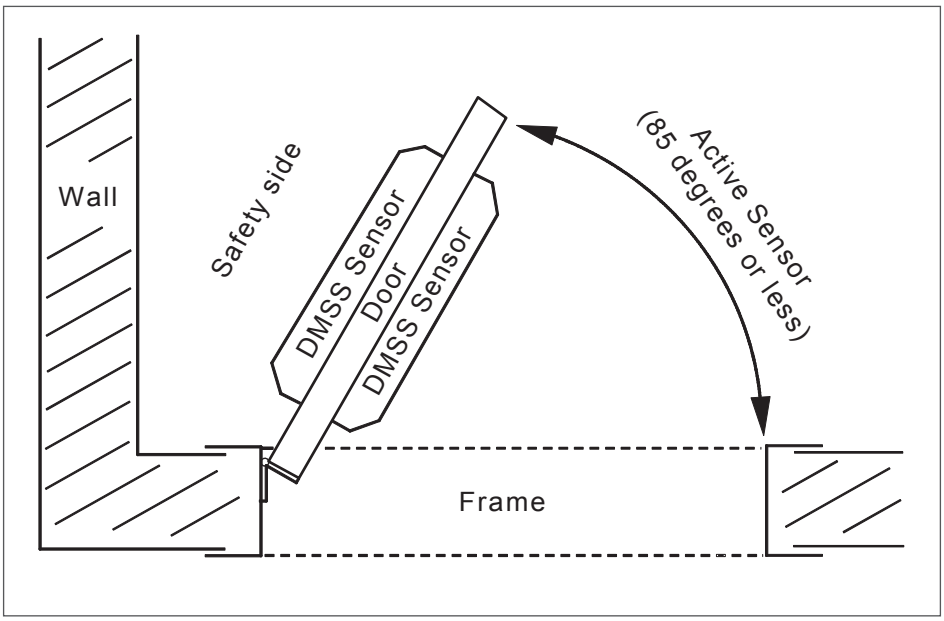

**Table 4-1. Control Box Settings and Selectable Values**

| Setting | Setting Display | Selectable Values | Values as Displayed | Description |
|---|---|---|---|---|
| Opening Speed | 05 | 01 = slow<br>02 = medium<br>03 = fast<br>(default = 01) | 01<br>02<br>03 | Controls opening speed of any normal weight and size door |
| Back Check Speed | b5 | 01 = 1 door<br>02 = 2 doors<br>(default = 01) | 01<br>02 | Controls speed of door near full open position to prevent door slamming open |
| Back Check Position | bP | 45-80 degrees<br>(default = 70) | 45-80 | Approximate angle at which door begins to decelerate near the full open position |
| Hold Open Delay | hd | 01-32 seconds<br>(default = 05) | 01-32 | Amount of time (in seconds) door remains fully open following an activate signal |
| Latch Position | LP | 00-23 degrees<br>(default = 13) | 00-23 | Approximate angle at which door begins to decelerate near the full closed position |
| Auto Reverse Closing | AC | off, on<br>(default = off) | OF On | When on, door will re-open upon hitting an obstruction |
| Electric Lock | EL | off<br>SA = fail safe<br>SE = fail secure<br>(default = off) | OF<br>SA<br>SE | To turn on, set to SA (fail safe) or SE (fail secure) to match locking device connected to control box locking interface receptacle (P10); when on, causes a 1 second delay between activate signal and door opening to allow time for most electric locks to disengage before operator opens door |
| Power Boost | Pb | off<br>5 seconds<br>continuous<br>(default = off) | OF<br>5S<br>Cn | When on, increases closing force of door from 9 lbs to 18 lbs to close door against high winds or stack pressure; turns on for 5 seconds or continuously after door reaches latch position during closing cycle; disabled by Power Boost disable input |
| Push 'N' Go | PG | off, on, fd<br>(default = off) | OF<br>On<br>Fd | When set to On or Fd, pushing door open 5 degrees causes operator to open door remainder of way and hold open. Hold open time is same as hd setting when set to On. Hold open time is 1 second when set to Fd. |
| Alternate Activate | AA | off, on<br>(default = off) | OF On | When on, door stays open until a second activate signal is received. |
| Safety Slow/Stop | SS | slow, stop<br>(default = slow) | SL SP | Determines response to a DMSS on the safety side of the door; if SL (slow), door goes to back check speed; if SP (stop), door stops for 5 seconds, then continues opening at back check speed |
| Special | Sd | off<br>30-85<br>(default = off) | OF<br>30-85 | Deactivate the Door Mounted Safety Sensor (DMSS) on safety side of door to eliminate nuisance detection of a wall or guard rail. |
| Status Announcement | SA | Reserved | Reserved | Reserved |

## 5 System Test

**⚠ WARNING ⚠**

**KEEP HANDS, CLOTHING, WIRES, TOOLS, LADDERS, ETC. AWAY FROM THE DOOR WHEN THE OPERATOR IS INITIALLY TURNED ON.**

If control box does not operate as expected during system test, see section 6 for troubleshooting tips.

5a With the door closed, set the 3-position switch, if used, to AUTO and turn on all AC power. For applications using companion door, try to get both doors to open same amount of degrees before hitting hard stop (either internal gearbox stop or rubber bumper on wall).

5b Activate the operator using an activation device. The operator should perform one sizing cycle.

**Sizing cycle:** Occurs when the door is activated for the first time after power is turned on. During the sizing cycle, the door opens and closes once.

**If the door sizes properly,** go to step No. 5.3.

**If the door does not open at all** during the sizing cycle:

- Check that the 3-position switch, if used, is not set to OFF.
- Check door for binds and proper mechanical installation.
- Verify that all safety sensors are inactive.
- If an electromechanical lock is used, check that the lock disengages before the operator opens the door.
- Verify that the Breakaway switch, if used, is connected to NC contacts. If a Breakaway switch is not used, check that the Breakaway cable coming from the control box logic board is jumpered (jumper part No. 761492-00).
- Check fuse, wiring, and connections.
- Adjust the operator as follows and check door operation:

Opening speed: ..... 01
Back check speed: ..... 01 for one door, 02 for two doors
Hold open delay: ..... 05
Back check position: ..... 75
Latch position: ..... 10
Close speed: ..... medium
Electric lock: ..... SA (fail safe) or SE (fail secure) to match lock

**If the door does not open fully** during the sizing cycle, check door for binds, obstructions, or items that could activate safety sensors.

5c After the sizing cycle is complete and the door is closed, apply a maintained activation signal and check that the door remains open while the activation signal is applied. Then release the activate signal and verify door closes after the open time delay expires.

5d To check the function of the door safety device:

1. Activate the door and then activate the approach side safety device while the door is open. The door should not close while the safety device is activated. Next, deactivate the safety device. The door should close after the hold open time delay expires.
2. With the door closed, activate the safety side safety device, then activate the door. The door should not open while the safety device is activated. Next, deactivate the safety device. The door should open when activated.

5e Set the 3-position switch, if used, to HOLD. Verify that the door opens and stays open.

5f Set the 3-position switch, if used, to OFF. Verify that the door closes. Verify that an activate signal does not open the door.

5g If a Breakaway switch is connected, set the 3-position switch, if used, to AUTO, then break open the door. Verify that an activate signal does not cause the door to move. Re-latch the door after testing.

5h Do not release the system for service until it is operating properly.

## 6 Troubleshooting

6a Identify all switch and sensor inputs that are currently active:

1. Remove breakaway jumper to enter diagnostic mode.

ⓘ **Note: When in diagnostic mode, controller will not open door.**

2. Keypad display shows each active input signal for 1 second. See table below:

(Key switch) set to Auto OR is not present ..... SA80
(Key switch) set to OFF ..... SA81
(Key switch) set to HOLD ..... SA82
(Activate) input is ON ..... SA83
(DMSS approach) activate input is ON ..... SA84
(DMSS safety) slowdown input is ON ..... SA85
(Carpet Safety) input is ON ..... SA86
(Bodyguard) input is ON ..... SA87
(Power Boost Disable) input is ON ..... SA88

For example, if key switch is set to Auto, Activate button is pressed, and DMSS sees something on the safety side, then display will repeat the sequence SA80, SA83, SA85 continuously until breakaway jumper is replaced.

3. After completing diagnostics, reinstall breakaway jumper for normal operation.

6b If control box does not function and the error message Er## flashes on the control box Setting and Value displays, turn AC power off and on to reset the control box. The following are common errors and suggested fixes:

ER 06: Master motor problem - verify master motor cable is connected to motor.
ER 14: Companion door added to a setup that was already sized - turn AC power off, then on and resize with both doors connected.

If problem cannot be corrected by using suggested fixes, contact 1-877-671-7011.

## 7 Release for Service

7a Remove all tools, installation equipment, and debris from the vicinity of the door.

7b Install all safety, traffic control, and instruction decals on the door as required by the latest revision of ANSI/BHMA A156.19. This is very important! Failure to do this leaves the installer LIABLE for any accident that might occur. This must be done!

7c Verbally instruct the owner or person in charge of the proper operation of the door.

7d Instruct the owner or person in charge to routinely inspect the door for the following:

- Visible damage
- Developing problems
- Minor preventive maintenance

7e Instruct the owner or person in charge who and where to call for service when required.

**⚠ IMPORTANT ⚠**

**Make sure to install all safety, traffic control, and instruction decals on the door as required.**




Printed in U.S.A.
740100 Rev. 02/14-h

740013

# Offset Pivot Arm

LCN®

Installation Instructions

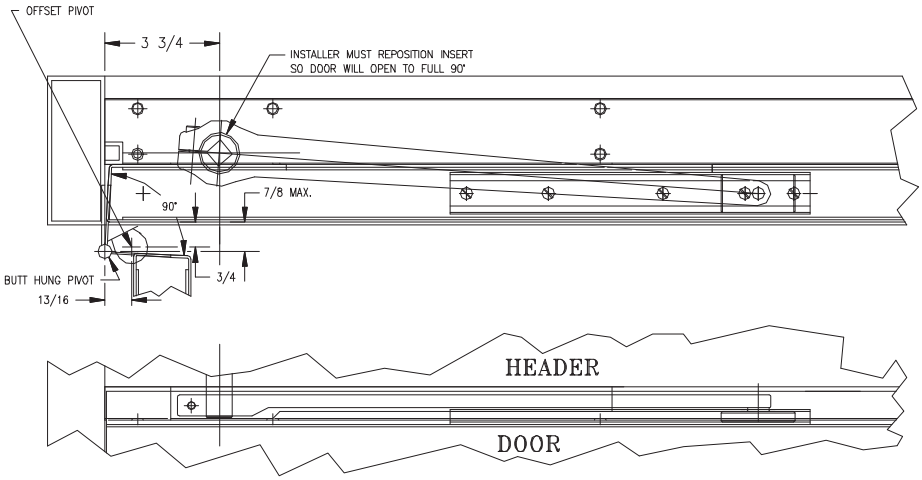


RIGHT HAND SHOWN
LEFT HAND OPPOSITE

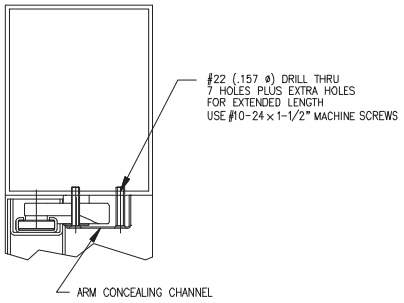


MUST USE
3 3/4" CENTER
HUNG OPERATOR

METAL DOOR

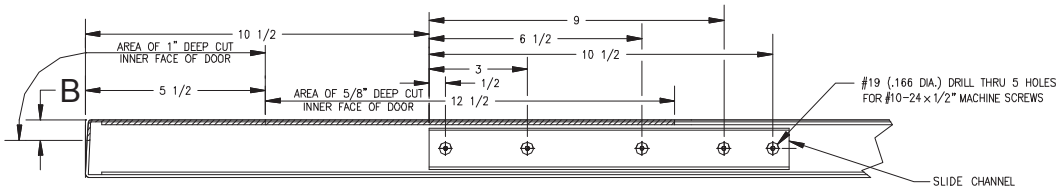


WOOD DOOR

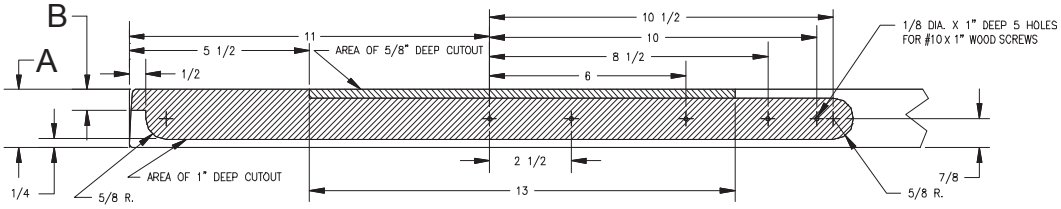


| Door Thickness (A) | Measurement B |
|---|---|
| 1 ¾" | ⅝" |
| 2" | ⅞" |
| 2 ¼" | 1 ⅛" |
| 2 ⅜" | 1 ¼" |
| 2 ½" | 1 ⅜" |

**Customer Service**

1-877-671-7011 www.allegion.com/us

ALLEGION


Printed in U.S.A.
740013 Rev. 04/15-d

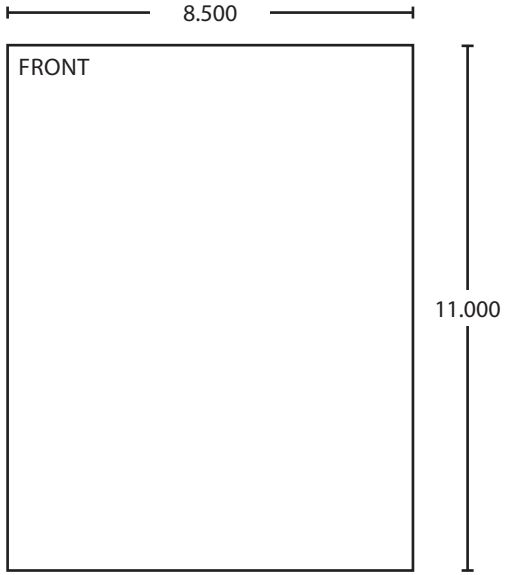


BEGINNING SHEET

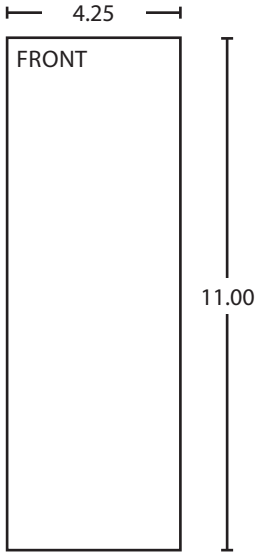


FOLDED SHEET

| Additional Notes: |
|---|
| 1. None |

| Revision History | | | | | |
|---|---|---|---|---|---|
| A | B | C | D | E | F |
| N/A | N/A | 047232 | 060910 | | |

Revision Description:
D > Revised artwork

| Material | Edited By | Approved By | EC Number | Release Date |
|---|---|---|---|---|
| White Paper | D. Myers | M. Sasso | 060910 | 04-23-15 |

Notes
1. printed one side
2. printed black
3. tolerance ± .13
4. printed in country may vary
5. drawings not to scale

Title
INSTALLATION INSTRUCTIONS FOR OFFSET PIVOT ARM

| Creation Date | Number | Revision |
|---|---|---|
| 08-30-08 | 740013 | D |

| Created By | Activity | |
|---|---|---|
| N/A | 3899 Hancock Expwy<br>Security, CO 80911 | |
| Software: InDesign CS6 | | © Allegion 2015 |

LCN®

740009-00

# Pull Arm Assembly

**Models: 9330, 9350, 9530, 9550, 9560, 9730, 9750, 9760**

# Installation Instructions

LCN®
121 West Railroad Avenue
Princeton, IL 61356-0100
1-800-526-2400
Fax: 800-666-0472
www.lcnclosers.com

Ingersoll Rand
Security Technologies

# PULL ARM DOOR ARM INSTALLATION

1. Install the header according to the template.

   **NOTE:** The operator spindle is normally at the full breakout position (-90º). The pull arm must be attached to the spindle at the full open position (+90º).

2. Turn on power to the operator and momentarily short the activation wires together. The spindle will begin to slowly rotate to the open position. When the spindle stops rotating, momentarily short the activation wires together again. Continue this process until the spindle has reached the full open position (+90º).
3. Once the spindle is at the full open position (+90º), wire nut the activation wires together.
4. Install the spindle adapter into the arm as required. (See template.)
5. Install the arm onto the spindle at the full open position (+90º) and tighten cap screw.
6. Install one end plug and loosely attach that end of the slide channel to the door.
7. Install the roller and “O” ring into the open end of the slide channel.
8. With the door in the full open position (+90º), insert the end of the arm into the roller.
9. Install the other end plug and attach the slide channel to the door completely.
10. Remove the wire nut from the activation wires.
11. Connect activation wires to activation device.
12. Test door operation.
13. If no further adjustments are needed, secure the arm by installing the washer and screw.

## HEADER

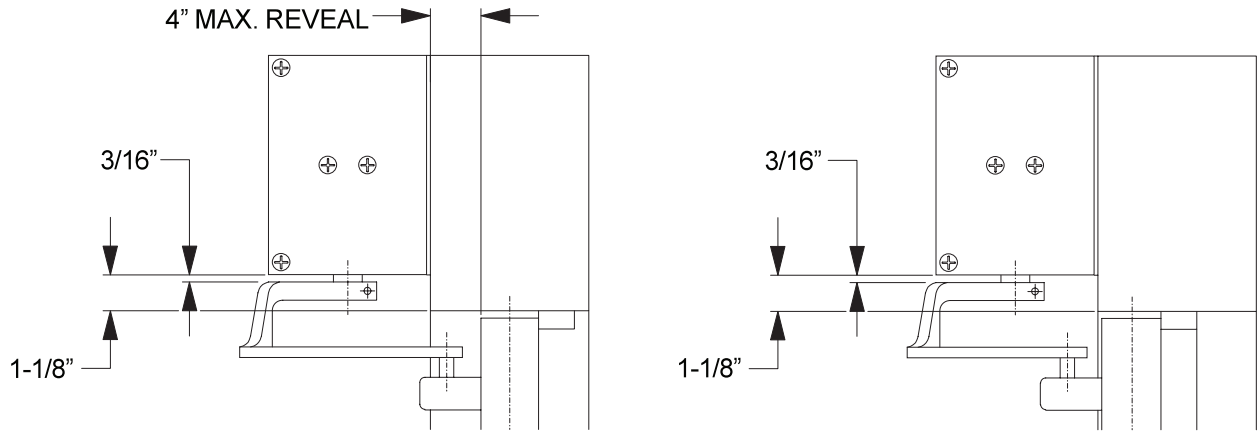


CENTER HUNG DOOR

OFFSET PIVOT OR BUTT HUNG DOOR

**(Maximum Reveal = 4”)**

## SLIDE CHANNEL

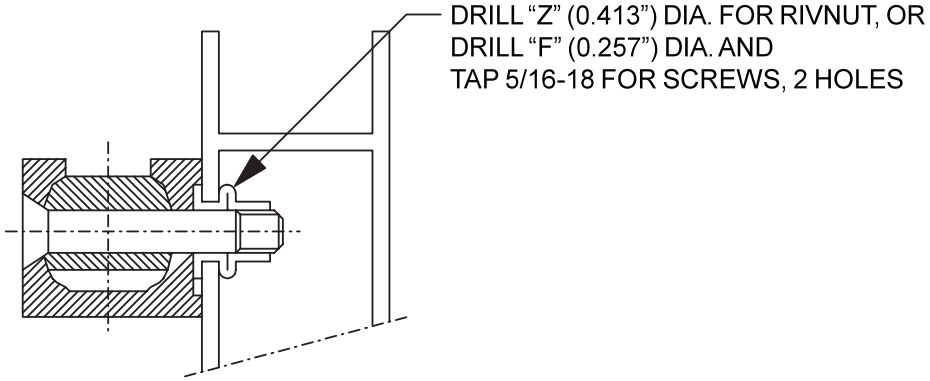


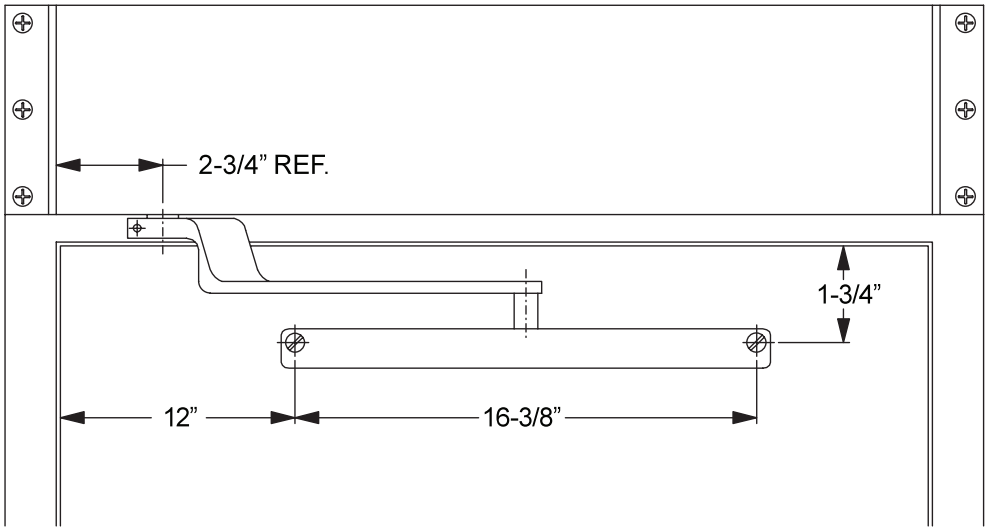


**(Right hand shown. Left hand opposite.)**

## SPINDLE ADAPTER

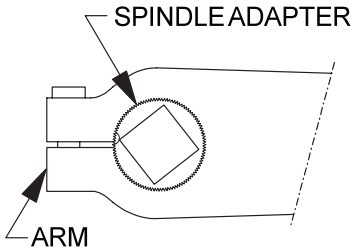


**NOTES:**

1. SLOT IN ADAPTER IS FACTORY INSTALLED TWO NOTCHES OFF CENTER LINE AS SHOWN. THIS WORKS FOR ALL STANDARD APPLICATIONS.
2. SLOTS SHOULD NEVER BE MISALIGNED MORE THAN FIVE NOTCHES EITHER WAY.

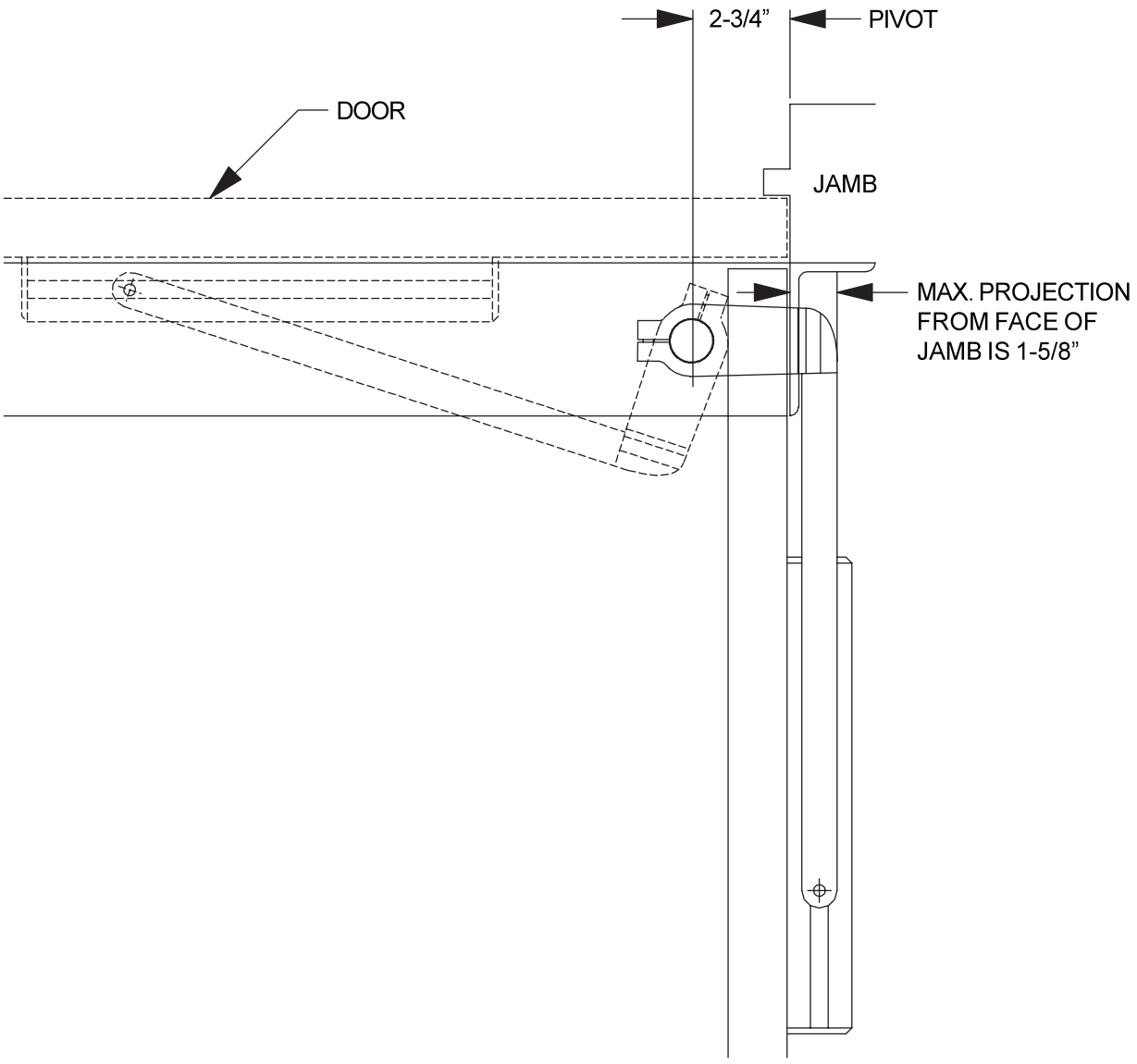


## MAXIMUM ARM PROJECTION

740008-00

# Push Arm & Link Assembly

**Models: 9540, 9550, 9560**

## Installation Instructions

121 West Railroad Avenue
Princeton, IL 61356-0100
1-877-671-7011
Fax: 1-800-248-1460
www.lcnclosers.com

# PUSH DOOR ARM INSTALLATION

1. Install the header and door bracket using the appropriate template.
2. Using the appropriate chart, measure and cut the exact length required for the threaded rod. Threaded rod length is determined by measuring the reveal dimension (in inches) from the surface of the door to which the arm is attached to the back surface of the header. Using the horizontal scale (calibrated in inches and quarter inches), follow the vertical line of the reveal dimension upwards until it intersects the slanted line. Reading to the left of the vertical scale will determine the exact length (between centers of the turnbuckles) of threaded rod required. DO **NOT** CUT THE THREADED ROD FROM THE END WITH THE HOLE!

   NOTE: The operator spindle is normally at the full breakout position (-90º). The arm must be attached to the spindle at the full open position (+90º).
3. Turn on power to the operator and momentarily short the activation wires together. The spindle will begin to slowly rotate to the open position. When the spindle stops rotating, momentarily short the activation wires together again. Continue this process until the spindle has reached the full open position (+90º).
4. Once the spindle is at the full open position (+90º), wire nut the activation wires together.
5. Install the spindle adapter into the arm as required. (See appropriate template.)
6. Install the arm onto the spindle at the full open position (+90º) and tighten cap screw.
7. Screw the threaded rod into the turnbuckles.
8. Remove the wire nut from the activation wires.
9. Connect activation wires to activation device.
10. Test door operation.
11. If no further adjustments are needed, secure the arm by installing the washer and screw.

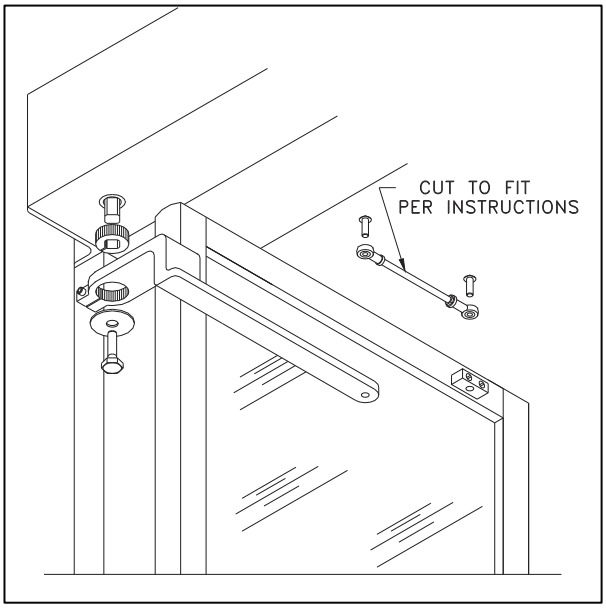

# INSTALLATION TEMPLATE
# OFFSET PIVOTED OR BUTT HINGED DOORS

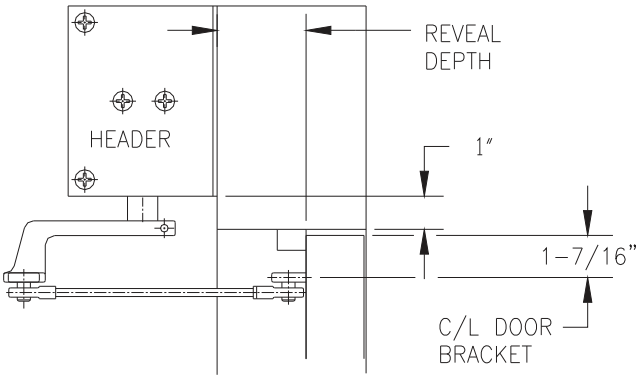


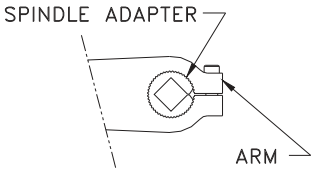


NOTE:

1. ADAPTER IS FACTORY INSTALLED SO THAT SLOT IS TWO NOTCHES OFF OF CENTERLINE AS SHOWN.
2. RE-ALIGN ADAPTER SO THAT SLOTS LINE UP.

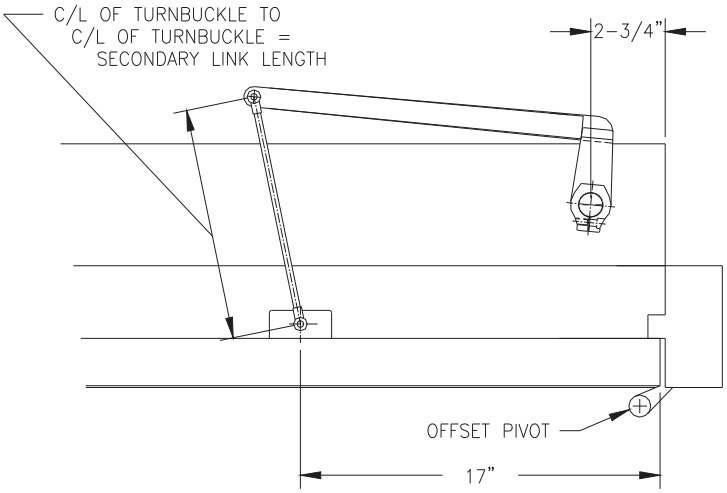


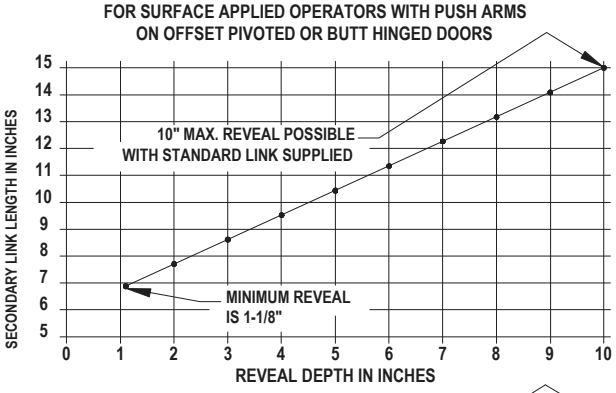


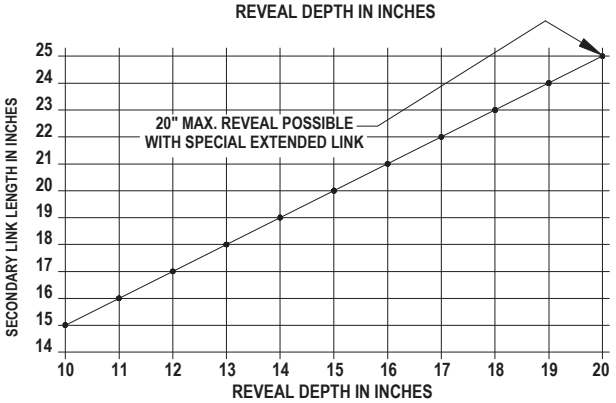

# INSTALLATION TEMPLATE
# 2-3/4" CENTER PIVOTED DOORS

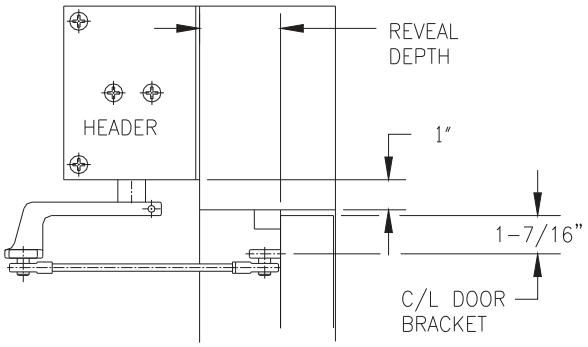


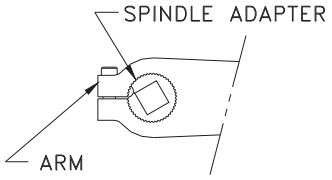


NOTE:

1. SLOT IN ADAPTER IS FACTORY INSTALLED TWO NOTCHES OFF CENTER LINE AS SHOWN. THIS WORKS FOR ALL STD. APPLICATIONS
2. SLOTS SHOULD NEVER BE MIS-ALIGNED MORE THAN FIVE NOTCHES EITHER WAY.

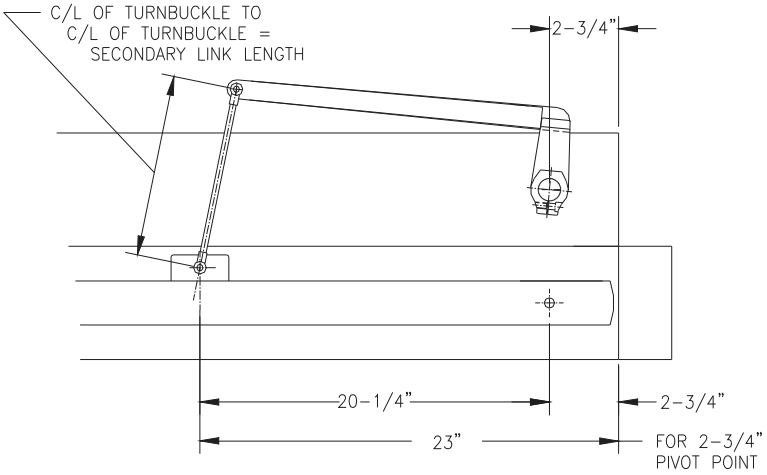


**FOR SURFACE APPLIED OPERATORS WITH PUSH ARMS ON 2-3/4" CENTER PIVOTED DOORS**

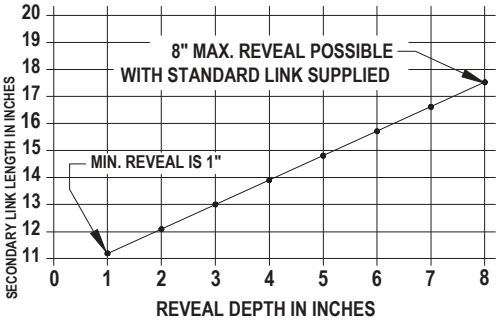


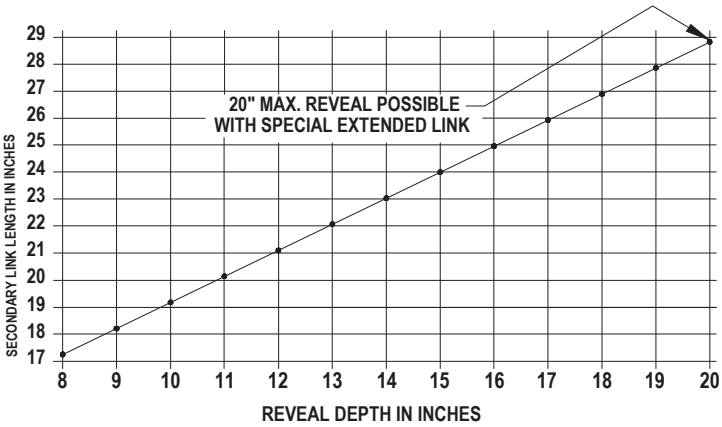

# INSTALLATION TEMPLATE
# 3-3/4" CENTER PIVOTED DOORS

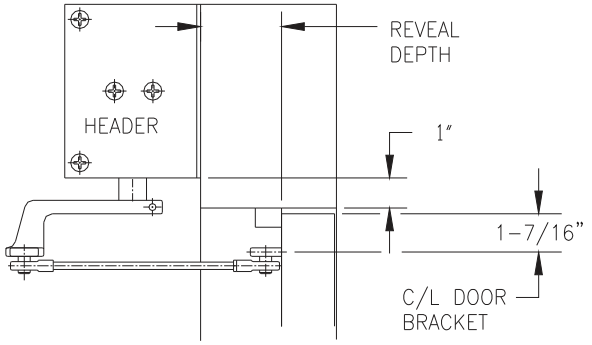


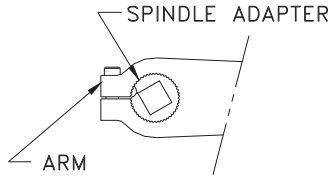


NOTE:

1. SLOT IN ADAPTER IS FACTORY INSTALLED TWO NOTCHES OFF CENTER LINE AS SHOWN. THIS WORKS FOR ALL STD. APPLICATIONS
2. SLOTS SHOULD NEVER BE MIS-ALIGNED MORE THAN FIVE NOTCHES EITHER WAY.

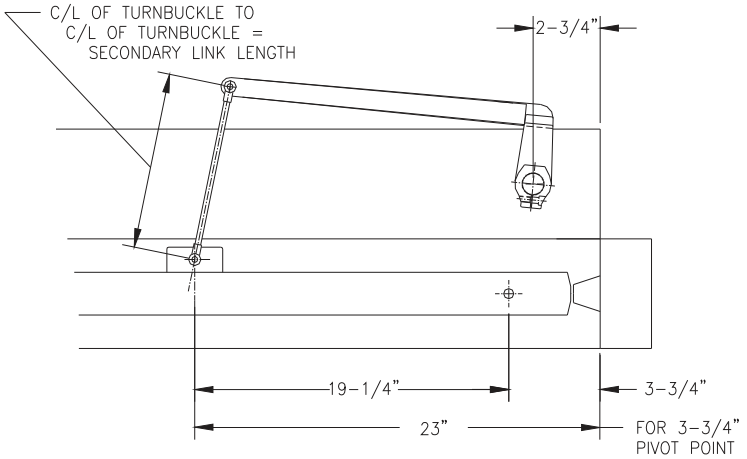


**FOR SURFACE APPLIED OPERATORS WITH PUSH ARMS ON 3-3/4" CENTER PIVOTED DOORS**